# VIDEO SURVEILLANCE SYSTEMS

# MUSEUM SCHOOL OF AVONDALE ESTATES

## DEKALB COUNTY - BOARD OF EDUCATION

## DECATUR, GA 30030

## SUBMITTED ON: JANUARY 4, 2018

### GENERAL NOTES:

A. NO CONDUIT RUN TO CONTAIN MORE THAN 180 DEGREES OF BENDS BETWEEN PULLING POINTS. PROVIDE JUNCTION BOXES WHERE REQUIRED TO MAINTAIN 180 DEGREE BEND RULE.

B. ALL WALL AND FLOOR PENETRATIONS TO BE SEALED AND FIREPROOFED. CONDUIT ROUTING PATHS TO BE COORDINATED WITH EXISTING SYSTEMS.

C. ALL CAMERAS SHALL BE ROUTED TO THE NEAREST MDF/IDF ROOM WITHOUT SPLICES. NO JUNCTIONS OR SPLICES IN CABLES ARE ACCEPTABLE.

D. ALL CABLES ROUTED ABOVE GRADE TO BE INSTALLED IN ELECTRICAL METALLIC TUBING (EMT) CONDUIT. MINIMUM SIZE TO BE 3/4". CONTRACTOR TO UTILIZE 2-HOLE STRPAS AND SECURITY FASTENERS. PVC MAY BE UTILIZED FOR RACEWAY ROUTED IN SLAB. ALL CONDUIT INSTALLED INDOORS AND BELOW CEILING TO BE PAINTED TO MATCH DECOR.

E. REFERENCE CCTV SCHEDULE FOR CAMERA MOUNTING REQUIREMENTS. ALL EXTERIOR CAMERAS SHALL BE PROVIDED AND INSTALLED IN A WEATHERPROOF ENCLOSURE AND EQUIPPED WITH HEATERS AND BLOWERS.

F. ALL POWER AND SIGNAL CABLES INSTALLED IN SLAB ON GRADE OR BELOW GRADE TO BE "WET" RATED / OUTSIDE PLANT RATED.

G. AT ALL EXTERIOR CAMERAS, CONTRACTOR TO PROVIDE AND INSTALL SURGE SUPPRESSION DEVICES AT CAMERA AND AT CCTV HEADEND EQUIPMENT FOR VIDEO SIGNAL AND POWER CONDUCTORS.

H. SECURITY CONTRACTOR IS RESPONSIBLE FOR THE SUPPLY AND INSTALLATION OF ANY ADDITIONAL 120 VAC / 20 AMP DEDICATED AND UNSWITCHED POWER CIRCUITS AND LOCAL POWER SUPPLIES REQUIRED AT EXTERIOR CAMERA LOCATIONS FOR PROPER OPERATION OF PTZ, ENVIRONMENTAL ENCLOSURE AND CAMERA.

I. SECURITY CONTRACTOR IS RESPONSIBLE FOR UPSIZING OR PROVIDING ADDITIONAL LOW VOLTAGE POWER CABLE AS NECESSARY.

J. SECURITY CONTRACTOR IS RESPONSIBLE FOR REMOVING ALL EXISTING CAMERAS, ASSOCIATED MOUNTING HARDWARE, CABLING, AND ASSOCIATED CONDUIT, AT EXTERIOR CAMERA LOCATIONS. ALL PENETRATIONS IN EXTERIOR WALLS THAT ARE LEFT AFTER THE REMOVAL OF THE EXTERIOR ANALOG PTZ CAMERAS, SHALL BE SEALED ON BOTH SIDES WITH OUTDOOR RATED SEALANT TO MATCH EXISTING DECOR.

### DEVICE LEGEND:

| | |
|---|---|
| | EXISTING ANALOG CAMERA TO BE REMOVED. |
| | NEW FIXED (MEGAPIXEL) VIDEO SURVEILLANCE CAMERA PROVIDED AND INSTALLED BY THE SECURITY CONTRACTOR. SEE CAMERA SCHEDULE FOR REQUIREMENTS. |
| | NEW MULTI-SENSOR (3 IMAGER) VIDEO SURVEILLANCE CAMERA PROVIDED AND INSTALLED BY THE SECURITY CONTRACTOR. SEE CAMERA SCHEDULE FOR REQUIREMENTS. |
| | NEW MULTI-SENSOR (4 IMAGER) VIDEO SURVEILLANCE CAMERA PROVIDED AND INSTALLED BY THE SECURITY CONTRACTOR. SEE CAMERA SCHEDULE FOR REQUIREMENTS. |
| | NEW 360 DEGREE (FISH-EYE) MEGAPIXEL VIDEO SURVEILLANCE CAMERA PROVIDED AND INSTALLED BY THE SECURITY CONTRACTOR. SEE CAMERA SCHEDULE FOR REQUIREMENTS. |
| | NEW PAN/TILT/ZOOM (MEGAPIXEL) VIDEO SURVEILLANCE CAMERA PROVIDED AND INSTALLED BY THE SECURITY CONTRACTOR. SEE CAMERA SCHEDULE FOR REQUIREMENTS. |
| WP | INDICATES REQUIREMENT FOR WEATHERPROOF EQUIPMENT. |
| F | INDICATES FUTURE CAMERA LOCATION. |
| VMS | NEW AVIGILON VIDEO MANAGEMENT WORKSTATION PROVIDED AND INSTALLED BY SECURITY CONTRACTOR. |
| K BAS | BURGULAR ALARM SYSTEM KEYPAD. PROVIDED AND INSTALLED BY THE SECURITY CONTRACTOR. |
| K DAS | DURESS ALARM SYSTEM KEYPAD. PROVIDED AND INSTALLED BY THE SECURITY CONTRACTOR. |

### SHEET LEGEND:


VS-000 COVER SHEET AND LEGENDS

VS-101 SITE PLAN

VS-201 FLOOR PLAN - BUILDING 1A
VS-202 FLOOR PLAN - BUILDING 1B
VS-203 FLOOR PLAN - 1ST FLOOR
VS-204 FLOOR PLAN - BUILDING 5

VS-301 LARGE SCALES

VS-401 ONE-LINE DIAGRAM - VIDEO SURVEILLANCE SYSTEM
VS-402 ONE-LINE DIAGRAM - VIDEO SURVEILLANCE SYSTEM
VS-403 ONE-LINE DIAGRAM - DURESS SYSTEM

VS-501 DETAILS
VS-502 DETAILS
VS-503 DETAILS

VS-601 CAMERA SCHEDULE



J&A ENGINEERING CONSULTANTS
49994 LOWER ROSWELL ROAD, SUITE ONE
MARIETTA, GEORGIA 30068
PHONE (770) 817-4220
FAX (770) 924-6920
WWW.JAENGINEERING.NET


Professional Seal

GEORGIA REGISTERED No. 24242 PROFESSIONAL ENGINEER GEORGE E GOWER

100% CONSTRUCTION DOCUMENTS

VIDEO SURVEILLANCE SYSTEMS
MUSEUM SCHOOL OF AVONDALE ESTATES
923 FORREST BLVD
DECATUR, GA 30030

100% CD 01/04/2018

Original Document Size = 30" x 42"


These drawings are the property of J&A Engineering and may not be reproduced or reused without permission of J&A Engineering, LLC 2009


Project No: 17008

Drawn By: Author

Checked By: Checker

COVER SHEET & LEGEND

VS-000

1/3/2018 9:01:29 AM
C:\Users\ptubbs\Documents\17008_Museum School Avondale Estates_R15_JA_Central_BTubbs@jaengineering.net.rvt

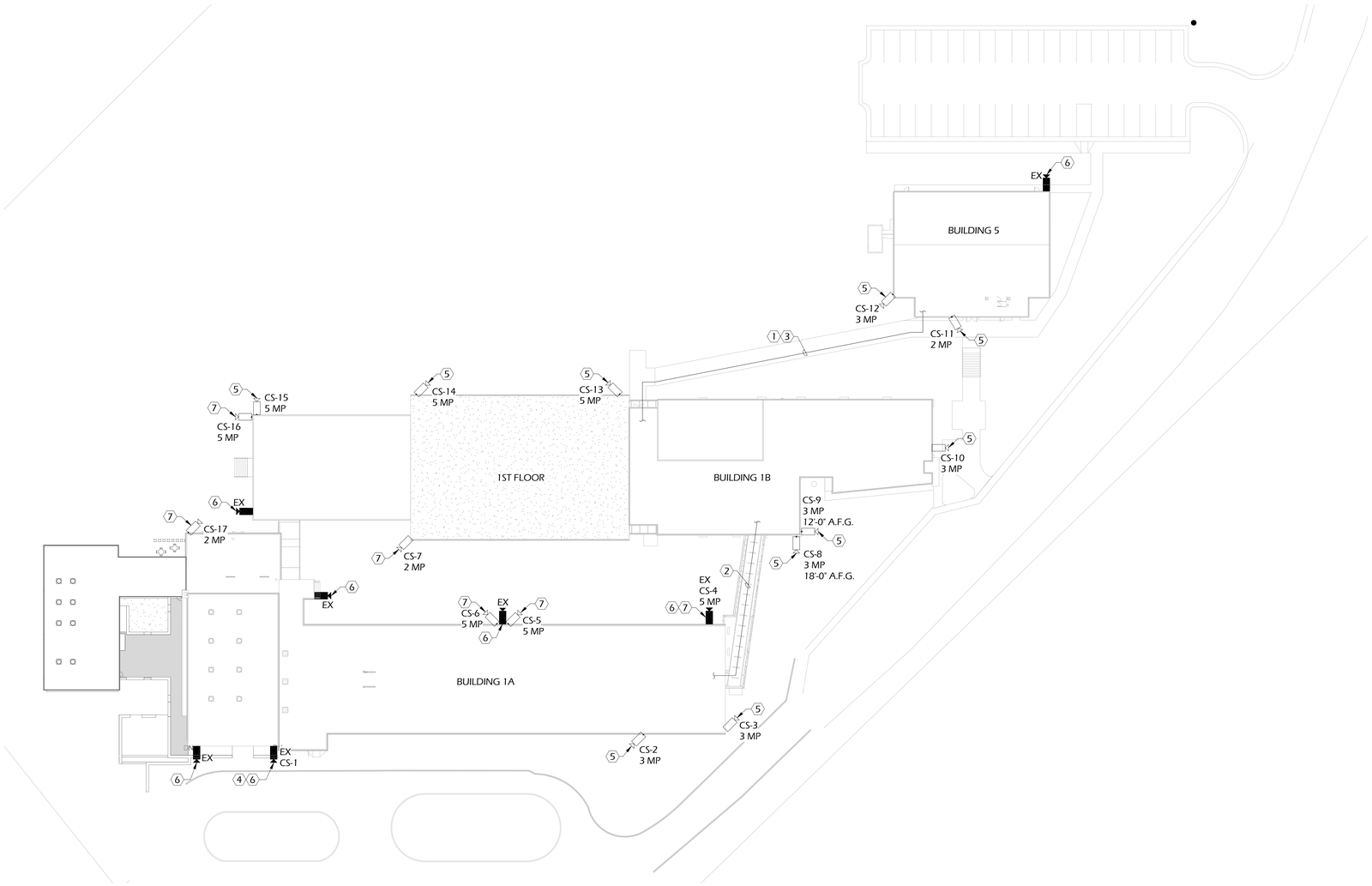


FLOOR PLAN
1" = 30'-0"

1 SITE PLAN VIDEO

## GENERAL NOTES:

A. ALL VIDEO SURVEILLANCE CABLES (VIDEO SIGNAL AND POWER) SHALL BE PLENUM RATED UNLESS INSTALLED IN OUTDOOR OR UNDERGROUND RACEWAY. ALL CABLES INSTALLED IN OUTDOOR OR UNDERGROUND RACEWAY SHALL BE WET RATED.

B. ALL VIDEO SURVEILLANCE CABLES SHALL BE ROUTED DIRECTLY TO INDICATED MDF/IDF ROOM WITHOUT SPLICES. JUNCTIONS OR SPLICES IN CABLES ARE NOT ACCEPTABLE.

C. REFERENCE VIDEO SURVEILLANCE SCHEDULE FOR CAMERA VIEW, LENS AND MOUNTING REQUIREMENTS.

D. ALL EXPOSED RACEWAY, INSTALLED FOR THIS PROJECT, MUST BE PAINTED TO MATCH DECOR.

E. "WP" INDICATES THAT CAMERA MUST BE MOUNTED IN A WEATHER PROOF ENCLOSURE.

F. ALL VIDEO SURVEILLANCE CAMERAS MUST BE CONNECTED TO THE DIGITAL VIDEO RECORDERS.

G. ALL EXTERIOR CAMERAS MUST BE PROTECTED BY SURGE SUPPRESSION AT CAMERA LOCATION AND AT HEAD END EQUIPMENT.

H. ALL CAMERA VIEWS MUST BE COORDINATED WITH ADMINISTRATIVE PERSONNEL INCLUDING THE PRINCIPAL AND ASSISTANT PRINCIPAL.

I. ALL CAMERA CABLES SHALL BE A MINIMUM OF CAT-6. REFERENCE SPECIFICATIONS FOR MORE INFORMATION.

J. CONTRACTOR TO REPLACE ACOUSTICAL CEILING TILES AS REQUIRED FROM DEMOLITION OF EXISTING CAMERAS.

K. CONTRACTOR IS RESPONSIBLE FOR REMOVING ALL EXISTING CAMERAS, ASSOCIATED MOUNTING HARDWARE, CABLING, AND ASSOCIATED CONDUIT. ALL PENETRATIONS IN EXTERIOR WALLS, THAT ARE LEFT AFTER REMOVAL OF THE ANALOG P/T/Z EXTERIOR CAMERAS, SHALL BE SEALED ON BOTH SIDES WITH OUTDOOR RATED SEALANT TO MATCH EXISTING DECOR.

L. CONTRACTOR IS RESPONSIBLE FOR PAINTING AND PATCHING ANY HOLES IN CEILINGS OR WALLS RESULTING FROM THIS PROJECT.

## KEY NOTES:

1. ONE(1) EXISTING - 3/4" EMT CONDUIT WITH COMPRESSIONS FITTINGS STRAPPED TO EXISTING AWNING.
2. ROUTE PLENUM RATED LOW VOLTAGE CABLE IN CEILING OF CONNECTING HALLWAY BETWEEN BUILDINGS 1A & 1B.
3. ROUTE PLENUM RATED LOW VOLTAGE CABLE IN EXISTING CONDUIT FROM BUILDING 1B TO GYM.
4. SECURITY CONTRACTOR TO PROVIDE AND INSTALL NEW MULTI-SENSOR CAMERA, LENSE, HOUSING, AND ASSOCIATED CABLING AS DESCRIBED BY THE SPECIFICATIONS. REFERENCE CAMERA SCHEDULE FOR DETAILS AND REQUIREMENTS.
5. SECURITY CONTRACTOR TO PROVIDE AND INSTALL NEW FIXED CAMERA, LENSE, HOUSING, AND ASSOCIATED CABLING AS DESCRIBED BY THE SPECIFICATIONS. REFERENCE CAMERA SCHEDULE FOR DETAILS AND REQUIREMENTS.
6. SECURITY CONTRACTOR TO REMOVE EXISTING CAMERA AND TURN OVER TO OWNER. DEMOLISH EXISTING CAMERA LOCATION.
7. SECURITY CONTRACTOR TO PRICE SUPPLY AND INSTALLATION OF NEW CAMERA, LENSE, AND HOUSING AS ADD ALTERNATE. SECURITY CONTRACTOR TO INCLUDE SUPPLY AND INSTALLATION OF CAT6 CABLE TO THIS FUTURE CAMERA LOCATION IN BASE BID.

J&A ENGINEERING CONSULTANTS
49994 LOWER ROSWELL ROAD, SUITE ONE
MARIETTA, GEORGIA 30068
PHONE (770) 817-4220
FAX (770) 234-6920
WWW.JAENGINEERING.NET

Professional Seal

GEORGIA REGISTERED No. 24242 PROFESSIONAL ENGINEER GEORGE E GOWER

100% CONSTRUCTION DOCUMENTS

# VIDEO SURVEILLANCE SYSTEMS
# MUSEUM SCHOOL OF AVONDALE ESTATES
923 FORREST BLVD
DECATUR, GA 30030

100% CD 01/04/2018

Original Document Size = 30" x 42"

These drawings are the property of J&A Engineering and may not be reproduced or reused without permission of J&A Engineering, LLC 2009

Project No: 17008
Drawn By: Author
Checked By: Checker

SITE PLAN

VS-101

1/3/2018 9:01:40 AM
C:\Users\btubbs\Documents\17008_Museum School Avondale Estates_R15_JA_Central_BTubbs@jaengineering.net.rvt

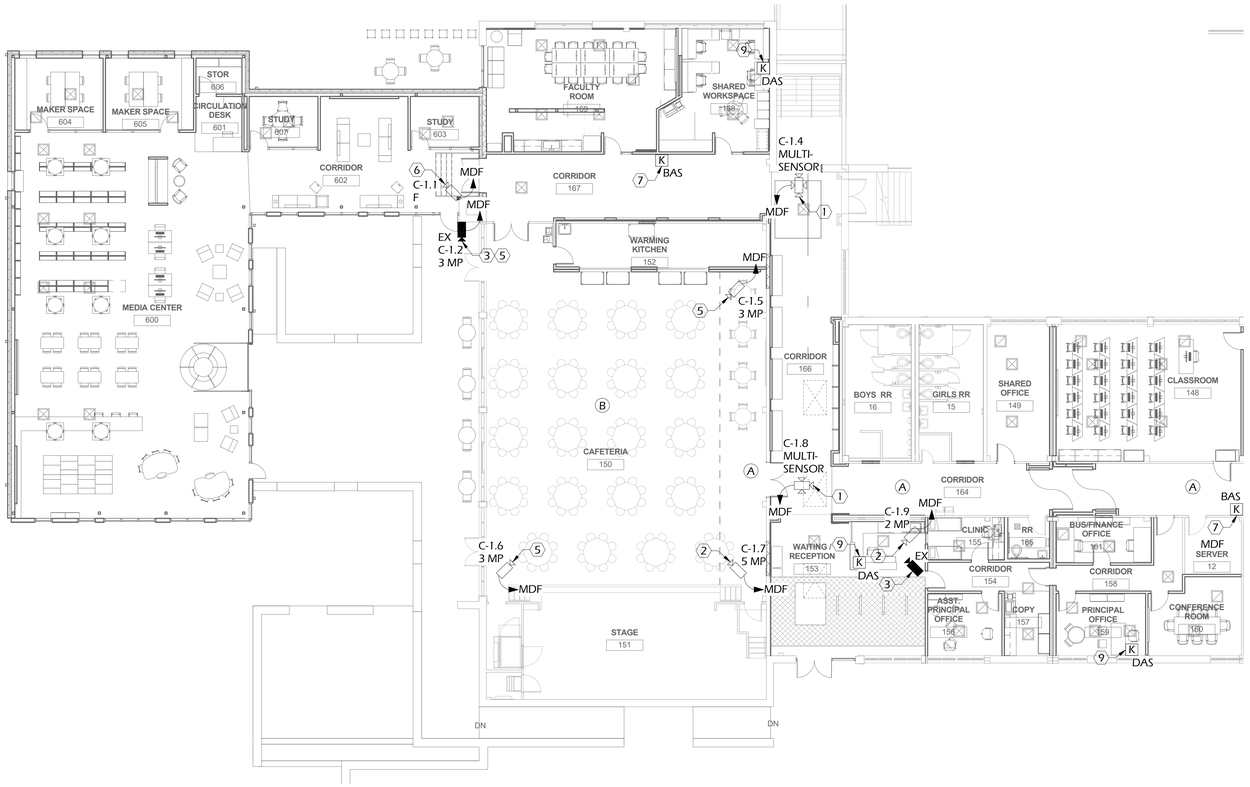


FLOOR PLAN 1 — BUILDING 1A - 1 VIDEO

3/32" = 1'-0"

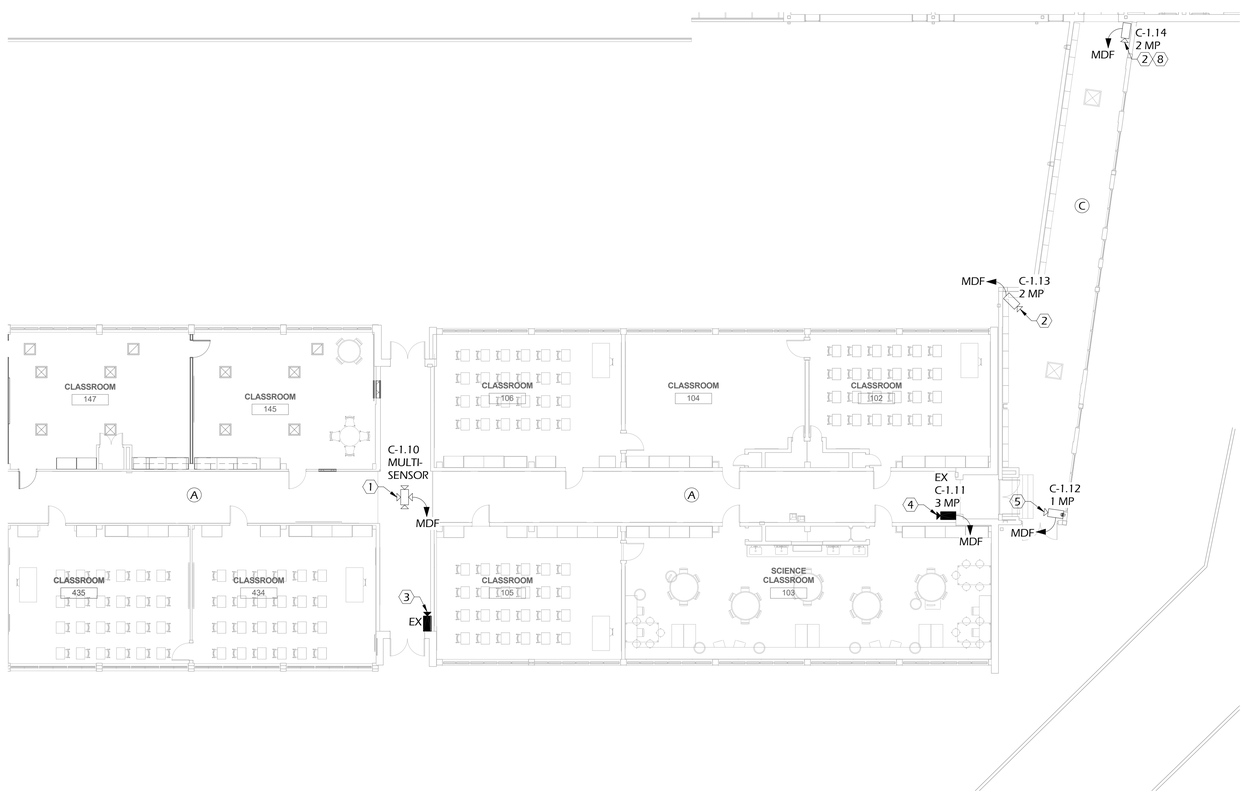


FLOOR PLAN 2 — BUILDING 1A - 2 VIDEO

3/32" = 1'-0"

## GENERAL NOTES:

A. ALL SIGNAL AND LOW VOLTAGE POWER CABLES SHALL BE PLENUM RATED. ALL CABLES TO BE ROUTED DIRECT TO EQUIPMENT ROOMS WITHOUT SPLICES. NO JUNCTION OR SPLICES IN CABLES ARE ACCEPTABLE.

B. ALL CABLE ROUTED IN CONDUIT IN SLAB ON GRADE OR BELOW GRADE SHALL BE OUTSIDE PLANT (WET LOCATION) RATED.

C. ALL EXTERIOR CAMERAS MUST BE PROTECTED BY SURGE SUPPRESSION ON VIDEO AND POWER CABLES AT BOTH THE CAMERA LOCATION AND SWITCH LOCATION.

D. ALL CABLE ROUTING TO BE CONCEALED IN PUBLIC AREAS. ALL CABLES TO BE NON-VISIBLE TO PUBLIC.

E. SECURITY CONTRACTOR TO REPLACE ACOUSTICAL CEILING TILES AS REQUIRED FROM DEMOLITION OF EXISTING CAMERAS.

F. THIS SCHOOL HAS EXISTING ANALOG CAMERAS. SECURITY CONTRACTOR IS RESPONSIBLE FOR REMOVING ALL EXISTING CAMERAS, ASSOCIATED MOUNTING HARDWARE, CABLING, AND ASSOCIATED CONDUIT.

G. SECURITY CONTRACTOR IS RESPONSIBLE FOR PAINTING AND PATCHING ANY HOLES IN CEILINGS OR WALLS RESULTING FROM THIS PROJECT.

H. SECURITY CONTRACTOR TO FIELD DETERMINE IF CORED HOLE EXISTS FOR PURPOSES OF ROUTING CABLE. IF CORED HOLE DOES NOT EXIST, CONTRACTOR IS TO CORE HOLE IN SOLID CMU WALL FOR ROUTING CAT-6 CABLE. FIREPROOF PENETRATION TO MAINTAIN CURRENT FIRE RATING OF WALL. CORE HOLE TO BE CONCEALED ABOVE ACCESSIBLE CEILING. SEE DETAILS FOR CORE REQUIREMENTS.

I. SECURITY CONTRACTOR TO ROUTE PLENUM RATED CABLES IN CEILING ABOVE LAY-IN TILE CEILING. ROUTE CABLES ON WALL IN CEILING SPACE SUPPORTED WITH J-HOOKS ON 4'-0" CENTERS. CABLES ARE NOT PERMITTED TO LAY UNSUPPORTED ACROSS CEILING TILES OR LIGHT FIXTURES.

J. ALL CAMERA VIEWS MUST BE COORDINATED WITH OWNER. CONTRACATOR TO ADJUST VIEW TO OWNER'S SATISFACTION.

## KEY NOTES:

1. SECURITY CONTRACTOR TO PROVIDE AND INSTALL NEW MULTI-SENSOR CAMERA, LENSE, HOUSING, AND ASSOCIATED CABLING AS DESCRIBED BY THE SPECIFICATIONS. REFERENCE CAMERA SCHEDULE FOR DETAILS AND REQUIREMENTS.
2. SECURITY CONTRACTOR TO PROVIDE AND INSTALL NEW FIXED CAMERA, LENSE, HOUSING, AND ASSOCIATED CABLING AS DESCRIBED BY THE SPECIFICATIONS. REFERENCE CAMERA SCHEDULE FOR DETAILS AND REQUIREMENTS.
3. SECURITY CONTRACTOR TO REMOVE EXISTING CAMERA AND TURN OVER TO OWNER. DEMOLISH EXISTING CAMERA LOCATION.
4. SECURITY CONTRACTOR TO REMOVE EXISTING CAMERA AND TURN OVER TO OWNER. THEN PROVIDE AND INSTALL NEW CAMERA PER CAMERA SCHEDULE.
5. SECURITY CONTRACTOR TO PRICE SUPPLY AND INSTALLATION OF CAMERA, LENSE, AND HOUSING AS ADD ALTERNATE. SECURITY CONTRACTOR TO INCLUDE SUPPLY AND INSTALLATION OF CAT6 CABLE TO THIS CAMERA LOCATION IN BASE BID.
6. SECURITY CONTRACTOR TO PROVIDE AND INSTALL CAT 6 CABLE WITH 50' SERVICE LOOP AT NOTED LOCATION FOR FUTURE CAMERA INSTALLATION.
7. SECURITY CONTRACTOR TO ADD NEW KEYPADS TO EXISTING BURGLAR ALARM SYSTEM. PROVIDE AND INSTALL KEYPAD, ALL LOW VOLTAGE CABLE AND PROGRAMMING REQUIRED. PRICE AS ADD ALTERNATE.
8. SECURITY CONTRACTOR TO PROVIDE AND INSTALL ETHERNET MIDSPAN DEVICE FOR NOTED CAMERAS.
9. SECURITY CONTRACTOR TO PROVIDE AND INSTALL KEYPAD, ALL LOW VOLTAGE CABLE AND PROGRAMMING REQUIRED FOR DURESS BUTTON ALARM SYSTEM. PRICE AS ADD ALTERNATE.

## CEILING LEGEND:

A. LAY-IN TILE @ 8'-0"

B. LAY-IN TILE @ 20'-0"

C. SUSPENDED GYPSOM BOARD CEILING @ 8'-0" WITH ACCESSIBILITY FROM SIDES.

J&A ENGINEERING CONSULTANTS
49994 LOWER ROSWELL ROAD, SUITE ONE
MARIETTA, GEORGIA 30068
PHONE: (770) 817-4220
FAX: (770) 234-6920
WWW.JAENGINEERING.NET

Professional Seal

GEORGIA REGISTERED No. 24242 PROFESSIONAL ENGINEER GEORGE E GOWER

100% CONSTRUCTION DOCUMENTS

# VIDEO SURVEILLANCE SYSTEMS
# MUSEUM SCHOOL OF AVONDALE ESTATES
923 FORREST BLVD
DECATUR, GA 30030

100% CD 01/04/2018

Original Document Size = 30" x 42"

These drawings are the property of J&A Engineering and may not be reproduced or reused without permission of J&A Engineering, LLC 2009

| | |
|---|---|
| Project No: | 17008 |
| Drawn By: | Author |
| Checked By: | Checker |

FLOOR PLAN - BUILDING 1A

VS-201

1/3/2018 9:01:59 AM
C:\Users\btubbs\Documents\17008_Museum School Avondale Estates_R15_JA_Central_BTubbs@jaengineering.net.rvt

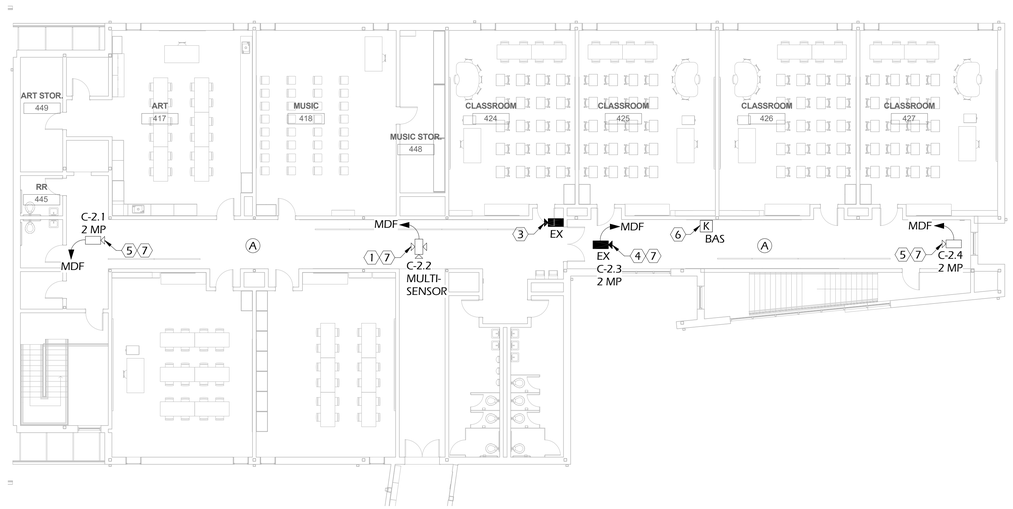


FLOOR PLAN 1 BUILDING 1B VIDEO
3/32" = 1'-0"

## GENERAL NOTES:

A. ALL SIGNAL AND LOW VOLTAGE POWER CABLES SHALL BE PLENUM RATED. ALL CABLES TO BE ROUTED DIRECT TO EQUIPMENT ROOMS WITHOUT SPLICES. NO JUNCTION OR SPLICES IN CABLES ARE ACCEPTABLE.

B. ALL CABLE ROUTED IN CONDUIT IN SLAB ON GRADE OR BELOW GRADE SHALL BE OUTSIDE PLANT (WET LOCATION) RATED.

C. ALL EXTERIOR CAMERAS MUST BE PROTECTED BY SURGE SUPPRESSION ON VIDEO AND POWER CABLES AT BOTH THE CAMERA LOCATION AND SWITCH LOCATION.

D. ALL CABLE ROUTING TO BE CONCEALED IN PUBLIC AREAS. ALL CABLES TO BE NON-VISIBLE TO PUBLIC.

E. SECURITY CONTRACTOR TO REPLACE ACOUSTICAL CEILING TILES AS REQUIRED FROM DEMOLITION OF EXISTING CAMERAS.

F. THIS SCHOOL HAS EXISTING ANALOG CAMERAS. SECURITY CONTRACTOR IS RESPONSIBLE FOR REMOVING ALL EXISTING CAMERAS, ASSOCIATED MOUNTING HARDWARE, CABLING, AND ASSOCIATED CONDUIT.

G. SECURITY CONTRACTOR IS RESPONSIBLE FOR PAINTING AND PATCHING ANY HOLES IN CEILINGS OR WALLS RESULTING FROM THIS PROJECT.

H. SECURITY CONTRACTOR TO FIELD DETERMINE IF CORED HOLE EXISTS FOR PURPOSES OF ROUTING CABLE. IF CORED HOLE DOES NOT EXIST, CONTRACTOR IS TO CORE HOLE IN SOLID CMU WALL FOR ROUTING CAT-6 CABLE. FIREPROOF PENETRATION TO MAINTAIN CURRENT FIRE RATING OF WALL. CORE HOLE TO BE CONCEALED ABOVE ACCESSIBLE CEILING. SEE DETAILS FOR CORE REQUIREMENTS.

I. SECURITY CONTRACTOR TO ROUTE PLENUM RATED CABLES IN CEILING ABOVE LAY-IN TILE CEILING. ROUTE CABLES ON WALL IN CEILING SPACE SUPPORTED WITH J-HOOKS ON 4'-0" CENTERS. CABLES ARE NOT PERMITTED TO LAY UNSUPPORTED ACROSS CEILING TILES OR LIGHT FIXTURES.

J. ALL CAMERA VIEWS MUST BE COORDINATED WITH OWNER. CONTRACATOR TO ADJUST VIEW TO OWNER'S SATISFACTION.

## KEY NOTES:

1. SECURITY CONTRACTOR TO PROVIDE AND INSTALL NEW MULTI-SENSOR CAMERA, LENSE, HOUSING, AND ASSOCIATED CABLING AS DESCRIBED BY THE SPECIFICATIONS. REFERENCE CAMERA SCHEDULE FOR DETAILS AND REQUIREMENTS.

2. SECURITY CONTRACTOR TO PROVIDE AND INSTALL NEW FIXED CAMERA, LENSE, HOUSING, AND ASSOCIATED CABLING AS DESCRIBED BY THE SPECIFICATIONS. REFERENCE CAMERA SCHEDULE FOR DETAILS AND REQUIREMENTS.

3. SECURITY CONTRACTOR TO REMOVE EXISTING CAMERA AND TURN OVER TO OWNER. DEMOLISH EXISTING CAMERA LOCATION.

4. SECURITY CONTRACTOR TO REMOVE EXISTING CAMERA AND TURN OVER TO OWNER. THEN PROVIDE AND INSTALL NEW CAMERA PER CAMERA SCHEDULE.

5. SECURITY CONTRACTOR TO PRICE SUPPLY AND INSTALLATION OF CAMERA, LENSE, AND HOUSING AS ADD ALTERNATE. SECURITY CONTRACTOR TO INCLUDE SUPPLY AND INSTALLATION OF CAT 6 CABLE TO THIS CAMERA LOCATION IN BASE BID.

6. SECURITY CONTRACTOR TO ADD NEW KEYPADS TO EXISTING BURGLAR ALARM SYSTEM. PROVIDE AND INSTALL KEYPAD, ALL LOW VOLTAGE CABLE AND ALL PROGRAMMING REQUIRED. PRICE AS ADD ALTERNATE.

7. SECURITY CONTRACTOR TO PROVIDE AND INSTALL ETHERNET MIDSPAN DEVICE FOR NOTED CAMERAS.

## CEILING LEGEND:

A. LAY-IN TILE @ 8'-0"

J&A ENGINEERING CONSULTANTS
49994 LOWER ROSWELL ROAD, SUITE ONE
MARIETTA, GEORGIA 30068
PHONE (770) 817-4220
FAX (770) 234-6920
WWW.JAENGINEERING.NET

Professional Seal

100% CONSTRUCTION DOCUMENTS

# VIDEO SURVEILLANCE SYSTEMS
# MUSEUM SCHOOL OF AVONDALE ESTATES
923 FORREST BLVD
DECATUR, GA 30030

100% CD 01/04/2018

Original Document Size = 30" x 42"

These drawings are the property of J&A Engineering and may not be reproduced or reused without permission of J&A Engineering, LLC 2009

| | |
|---|---|
| Project No: | 17008 |
| Drawn By: | Author |
| Checked By: | Checker |

FLOOR PLAN - BUILDING 1B

VS-202

1/3/2018 9:02:18 AM
C:\Users\btubbs\Documents\17008_Museum School Avondale Estates_R15_JA_Central_BTubbs@jaengineering.net.rvt

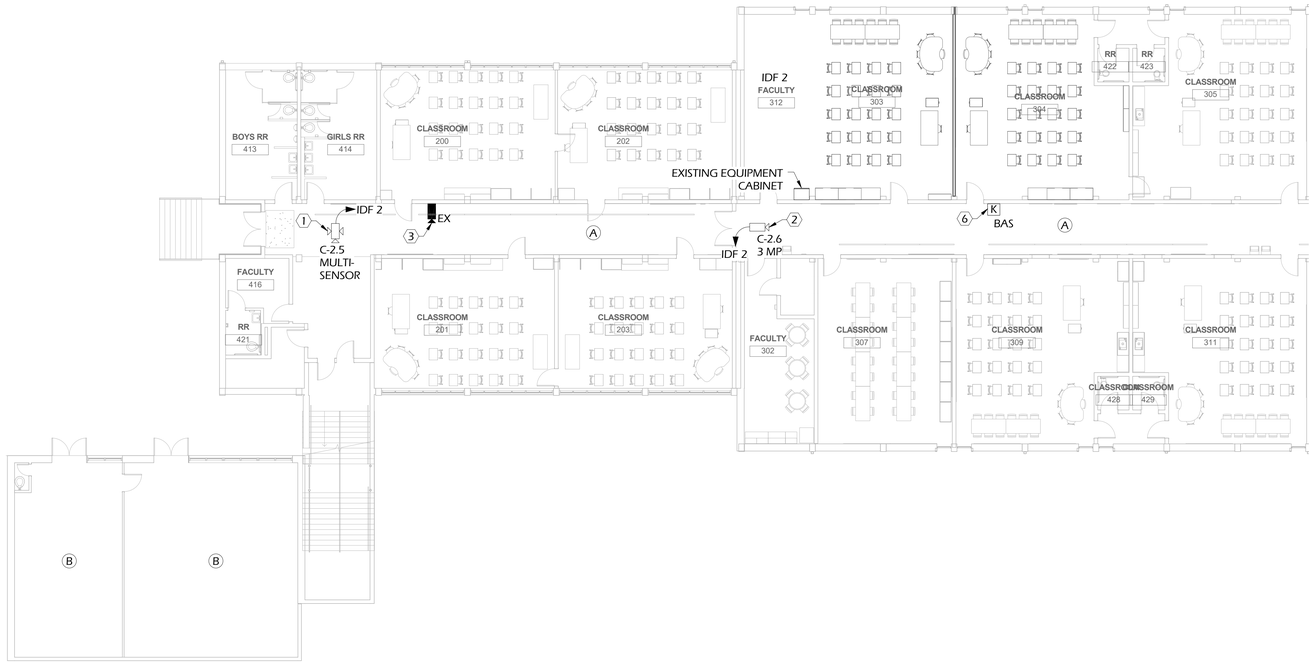


FLOOR PLAN 3/32" = 1'-0" — 1 — 1ST FLOOR - A VIDEO

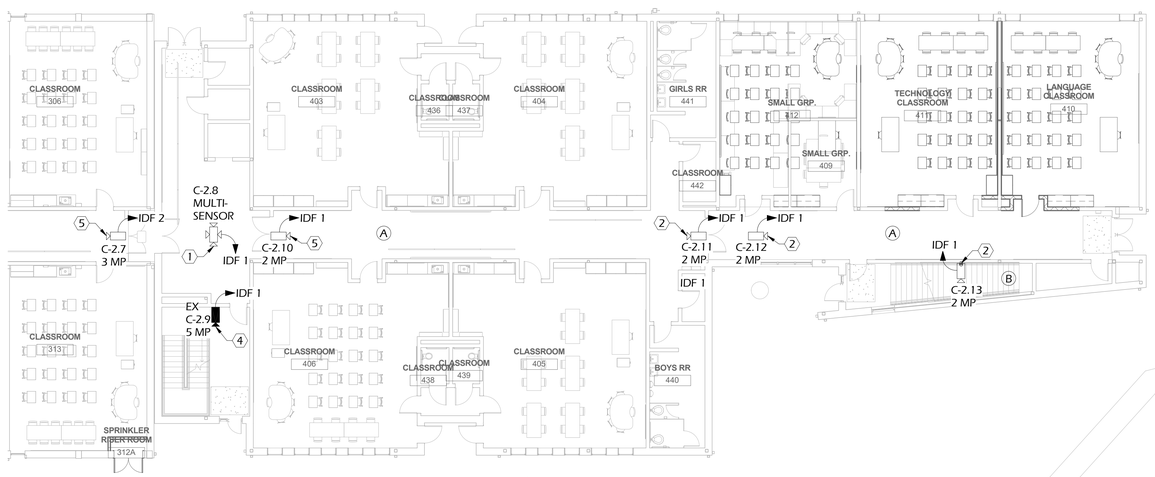


FLOOR PLAN 3/32" = 1'-0" — 2 — 1ST FLOOR - B VIDEO

## GENERAL NOTES:

A. ALL SIGNAL AND LOW VOLTAGE POWER CABLES SHALL BE PLENUM RATED. ALL CABLES TO BE ROUTED DIRECT TO EQUIPMENT ROOMS WITHOUT SPLICES. NO JUNCTION OR SPLICES IN CABLES ARE ACCEPTABLE.

B. ALL CABLE ROUTED IN CONDUIT IN SLAB ON GRADE OR BELOW GRADE SHALL BE OUTSIDE PLANT (WET LOCATION) RATED.

C. ALL EXTERIOR CAMERAS MUST BE PROTECTED BY SURGE SUPPRESSION ON VIDEO AND POWER CABLES AT BOTH THE CAMERA LOCATION AND SWITCH LOCATION.

D. ALL CABLE ROUTING TO BE CONCEALED IN PUBLIC AREAS. ALL CABLES TO BE NON-VISIBLE TO PUBLIC.

E. SECURITY CONTRACTOR TO REPLACE ACOUSTICAL CEILING TILES AS REQUIRED FROM DEMOLITION OF EXISTING CAMERAS.

F. THIS SCHOOL HAS EXISTING ANALOG CAMERAS. SECURITY CONTRACTOR IS RESPONSIBLE FOR REMOVING ALL EXISTING CAMERAS, ASSOCIATED MOUNTING HARDWARE, CABLING, AND ASSOCIATED CONDUIT.

G. SECURITY CONTRACTOR IS RESPONSIBLE FOR PAINTING AND PATCHING ANY HOLES IN CEILINGS OR WALLS RESULTING FROM THIS PROJECT.

H. SECURITY CONTRACTOR TO FIELD DETERMINE IF CORED HOLE EXISTS FOR PURPOSES OF ROUTING CABLE. IF CORED HOLE DOES NOT EXIST, CONTRACTOR IS TO CORE HOLE IN SOLID CMU WALL FOR ROUTING CAT-6 CABLE. FIREPROOF PENETRATION TO MAINTAIN CURRENT FIRE RATING OF WALL. CORE HOLE TO BE CONCEALED ABOVE ACCESSIBLE CEILING. SEE DETAILS FOR CORE REQUIREMENTS.

I. SECURITY CONTRACTOR TO ROUTE PLENUM RATED CABLES IN CEILING ABOVE LAY-IN TILE CEILING. ROUTE CABLES ON WALL IN CEILING SPACE SUPPORTED WITH J-HOOKS ON 4'-0" CENTERS. CABLES ARE NOT PERMITTED TO LAY UNSUPPORTED ACROSS CEILING TILES OR LIGHT FIXTURES.

J. ALL CAMERA VIEWS MUST BE COORDINATED WITH OWNER. CONTRACATOR TO ADJUST VIEW TO OWNER'S SATISFACTION.

## KEY NOTES:

1. SECURITY CONTRACTOR TO PROVIDE AND INSTALL NEW MULTI-SENSOR CAMERA, LENSE, HOUSING, AND ASSOCIATED CABLING AS DESCRIBED BY THE SPECIFICATIONS. REFERENCE CAMERA SCHEDULE FOR DETAILS AND REQUIREMENTS.

2. SECURITY CONTRACTOR TO PROVIDE AND INSTALL NEW FIXED CAMERA, LENSE, HOUSING, AND ASSOCIATED CABLING AS DESCRIBED BY THE SPECIFICATIONS. REFERENCE CAMERA SCHEDULE FOR DETAILS AND REQUIREMENTS.

3. SECURITY CONTRACTOR TO REMOVE EXISTING CAMERA AND TURN OVER TO OWNER. DEMOLISH EXISTING CAMERA LOCATION.

4. SECURITY CONTRACTOR TO REMOVE EXISTING CAMERA AND TURN OVER TO OWNER. THEN PROVIDE AND INSTALL NEW CAMERA PER CAMERA SCHEDULE.

5. SECURITY CONTRACTOR TO PRICE SUPPLY AND INSTALLATION OF CAMERA, LENSE, AND HOUSING AS ADD ALTERNATE. SECURITY CONTRACTOR TO INCLUDE SUPPLY AND INSTALLATION OF CAT6 CABLE TO THIS CAMERA LOCATION IN BASE BID.

6. SECURITY CONTRACTOR TO ADD NEW KEYPADS TO EXISTING BURGLAR ALARM SYSTEM. PROVIDE AND INSTALL KEYPAD, ALL LOW VOLTAGE CABLE AND ALL PROGRAMMING REQUIRED. PRICE AS ADD ALTERNATE.

## CEILING LEGEND:

A. LAY-IN TILE @ 8'-0"

B. OPEN TO STRUCTURE

J&A ENGINEERING CONSULTANTS
49994 LOWER ROSWELL ROAD, SUITE ONE
MARIETTA, GEORGIA 30068
PHONE (770) 817-4220
FAX (770) 234-6920
WWW.JAENGINEERING.NET

Professional Seal

GEORGIA REGISTERED No. 24242 PROFESSIONAL ENGINEER GEORGE E GOWER

100% CONSTRUCTION DOCUMENTS

VIDEO SURVEILLANCE SYSTEMS
MUSEUM SCHOOL OF AVONDALE ESTATES
923 FORREST BLVD
DECATUR, GA 30030

100% CD 01/04/2018

Original Document Size = 30" x 42"

These drawings are the property of J&A Engineering and may not be reproduced or reused without permission of J&A Engineering, LLC 2009

Project No: 17008
Drawn By: Author
Checked By: Checker

FLOOR PLAN - 1ST FLOOR

VS-203

1/3/2018 9:02:44 AM
C:\Users\ptubbs\Documents\17008_Museum School Avondale Estates_R15_JA_Central_BTubbs@jaengineering.net.rvt

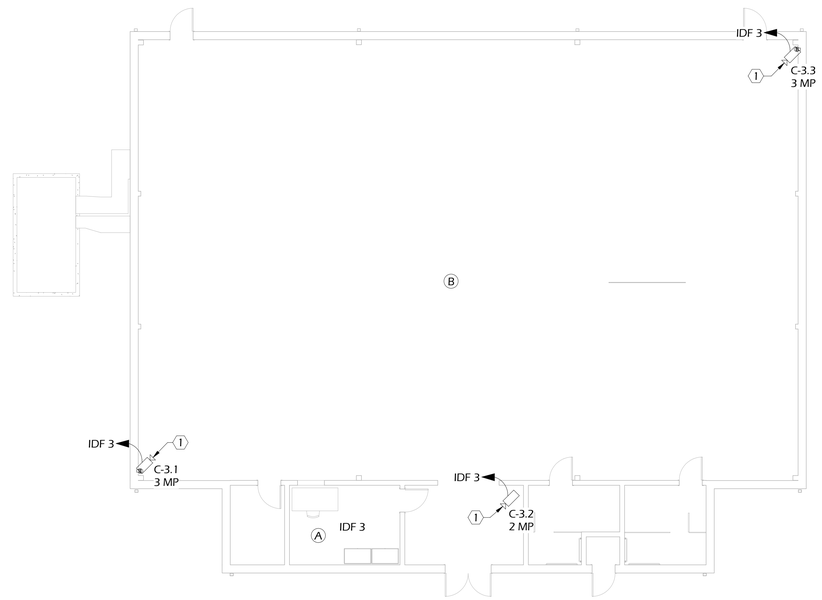


FLOOR PLAN 1 BLDG 5 VIDEO SURVEILLANCE
1/8" = 1'-0"

## GENERAL NOTES:

A. ALL SIGNAL AND LOW VOLTAGE POWER CABLES SHALL BE PLENUM RATED. ALL CABLES TO BE ROUTED DIRECT TO EQUIPMENT ROOMS WITHOUT SPLICES. NO JUNCTION OR SPLICES IN CABLES ARE ACCEPTABLE.

B. ALL CABLE ROUTED IN CONDUIT IN SLAB ON GRADE OR BELOW GRADE SHALL BE OUTSIDE PLANT (WET LOCATION) RATED.

C. ALL EXTERIOR CAMERAS MUST BE PROTECTED BY SURGE SUPPRESSION ON VIDEO AND POWER CABLES AT BOTH THE CAMERA LOCATION AND SWITCH LOCATION.

D. ALL CABLE ROUTING TO BE CONCEALED IN PUBLIC AREAS. ALL CABLES TO BE NON-VISIBLE TO PUBLIC.

E. SECURITY CONTRACTOR TO REPLACE ACOUSTICAL CEILING TILES AS REQUIRED FROM DEMOLITION OF EXISTING CAMERAS.

F. THIS SCHOOL HAS EXISTING ANALOG CAMERAS. SECURITY CONTRACTOR IS RESPONSIBLE FOR REMOVING ALL EXISTING CAMERAS, ASSOCIATED MOUNTING HARDWARE, CABLING, AND ASSOCIATED CONDUIT.

G. SECURITY CONTRACTOR IS RESPONSIBLE FOR PAINTING AND PATCHING ANY HOLES IN CEILINGS OR WALLS RESULTING FROM THIS PROJECT.

H. SECURITY CONTRACTOR TO FIELD DETERMINE IF CORED HOLE EXISTS FOR PURPOSES OF ROUTING CABLE. IF CORED HOLE DOES NOT EXIST, CONTRACTOR IS TO CORE HOLE IN SOLID CMU WALL FOR ROUTING CAT-6 CABLE. FIREPROOF PENETRATION TO MAINTAIN CURRENT FIRE RATING OF WALL. CORE HOLE TO BE CONCEALED ABOVE ACCESSIBLE CEILING. SEE DETAILS FOR CORE REQUIREMENTS.

I. SECURITY CONTRACTOR TO ROUTE PLENUM RATED CABLES IN CEILING ABOVE LAY-IN TILE CEILING. ROUTE CABLES ON WALL IN CEILING SPACE SUPPORTED WITH J-HOOKS ON 4'-0" CENTERS. CABLES ARE NOT PERMITTED TO LAY UNSUPPORTED ACROSS CEILING TILES OR LIGHT FIXTURES.

J. ALL CAMERA VIEWS MUST BE COORDINATED WITH OWNER. CONTRACATOR TO ADJUST VIEW TO OWNER'S SATISFACTION.

## KEY NOTES:

1. SECURITY CONTRACTOR TO PROVIDE AND INSTALL NEW FIXED CAMERA, LENSE, HOUSING, AND ASSOCIATED CABLING AS DESCRIBED BY THE SPECIFICATIONS. REFERENCE CAMERA SCHEDULE FOR DETAILS AND REQUIREMENTS.

## CEILING LEGEND:

A. LAY-IN TILE @ 8'-0"

B. OPEN TO STRUCTURE

J&A ENGINEERING CONSULTANTS
49994 LOWER ROSWELL ROAD, SUITE ONE
MARIETTA, GEORGIA 30068
PHONE (770) 817-4220
FAX (770) 234-6920
WWW.JAENGINEERING.NET

Professional Seal

100% CONSTRUCTION DOCUMENTS

# VIDEO SURVEILLANCE SYSTEMS
# MUSEUM SCHOOL OF AVONDALE ESTATES
923 FORREST BLVD
DECATUR, GA 30030

100% CD 01/04/2018

Original Document Size = 30" x 42"

These drawings are the property of J&A Engineering and may not be reproduced or reused without permission of J&A Engineering, LLC 2009

Project No: 17008
Drawn By: Author
Checked By: Checker

BUILDING 5

VS-204

1/3/2018 9:02:54 AM
C:\Users\ptubbs\Documents\17008_Museum School Avondale Estates_R15_JA_Central_BTubbs@jaengineering.net.rvt

## KEY NOTES:

1. SECURITY CONTRACTOR TO UTILIZE EXISTING EQUIPMENT RACKS OR CABINET TO MOUNT POE SWITCHES.
2. SECURITY CONTRACTOR TO PROVIDE AND INSTALL UPS UNIT AND ENSURE THAT POE NETWORK SWITCHES INSTALLED FOR SECURITY NETWORK ARE POWERED BY UPS UNITS.
3. SECURITY CONTRACTOR TO UTILIZE EXISTING UPS UNIT TO POWER POE NETWORK SWITCH.
4. SECURITY CONTRACTOR TO PROVIDE AND INSTALL UN-SWITCHED, DEDICATED 120VAC/20AMP CIRCUIT WITH WALL MOUNTED DUPLEX OUTLET.
5. SECURITY CONTRACTOR TO REMOVE THE ABANDONED POWER SUPPLY. THEN PROVIDE AND INSTALL A 24" X 24" PLYWOOD BACKBOARD IN THE OLD POWER SUPPLY LOCATION.
6. SECURITY CONTRACTOR TO PROVIDE AND INSTALL HARDENED POE NETWORK SWITCH ON BACKBOARD. ROUTE FIBER AND CAT 6 CABLES DIRECTLY INTO POE NETWORK SWITCH.
7. SECURITY CONTRACTOR TO COORDINATE WITH THE MUSEUM SCHOOL IT SUPPORT FOR SPACE IN EXISTING RACK TO MOUNT AVIGILON ACCESS CONTROL APPLIANCE.

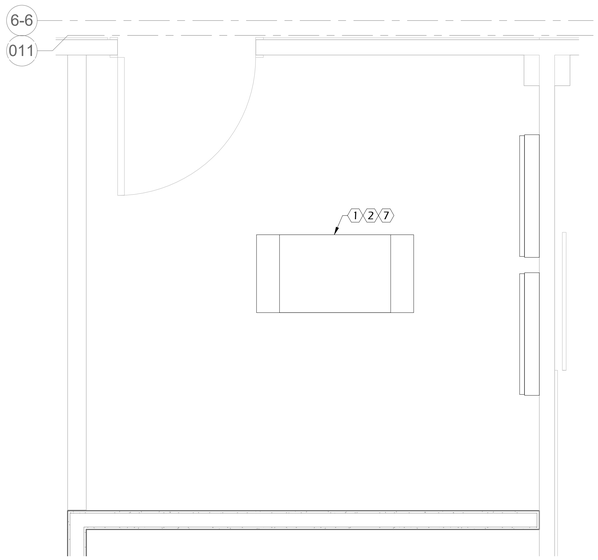


LARGE SCALES 3/4" = 1'-0" 1 BUILDING 1A - MDF - SERVER RM 12

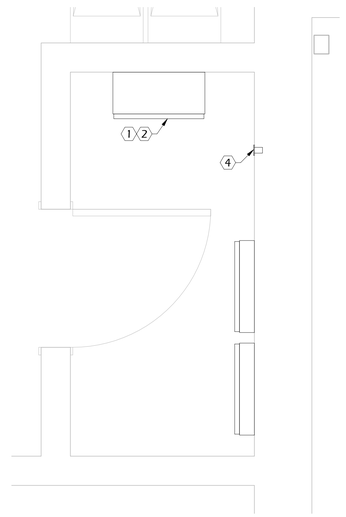


LARGE SCALES 3/4" = 1'-0" 2 1ST FLOOR - IDF 1 - UTILITY RM 409

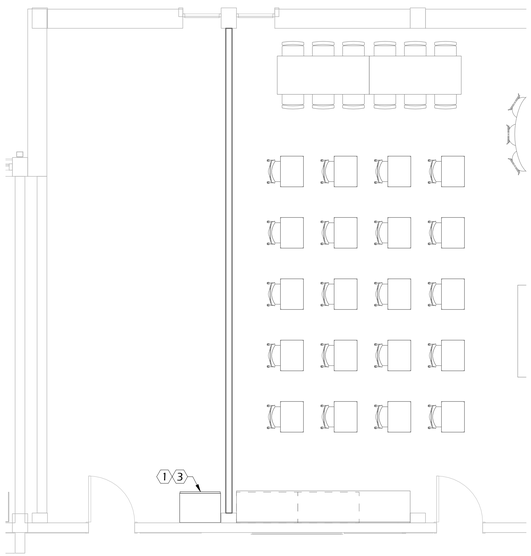


LARGE SCALES 1/4" = 1'-0" 3 1ST FLOOR - IDF 2 - FACULTY RM 312

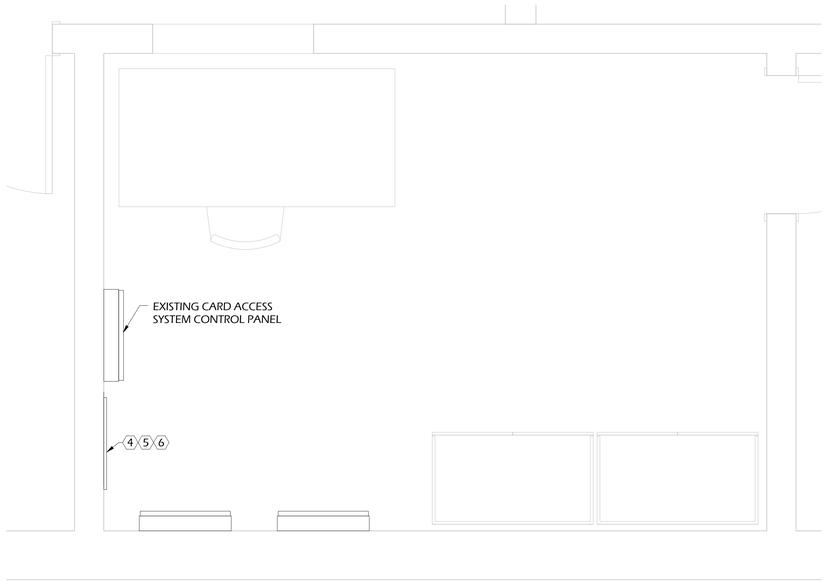


LARGE SCALES 3/4" = 1'-0" 4 BLDG 5 - IDF 3 - OFFICE RM 512


J&A ENGINEERING CONSULTANTS
49994 LOWER ROSWELL ROAD, SUITE ONE
MARIETTA, GEORGIA 30068
PHONE (770) 817-4220
FAX (770) 234-6920
WWW.JAENGINEERING.NET


Professional Seal

GEORGIA REGISTERED No. 24242 PROFESSIONAL ENGINEER GEORGE E GOWER

100% CONSTRUCTION DOCUMENTS

VIDEO SURVEILLANCE SYSTEMS

MUSEUM SCHOOL OF AVONDALE ESTATES
923 FORREST BLVD
DECATUR, GA 30030

100% CD 01/04/2018

Original Document Size = 30" x 42"


These drawings are the property of J&A Engineering and may not be reproduced or reused without permission of J&A Engineering, LLC 2009


| | |
|---|---|
| Project No: | 17008 |
| Drawn By: | Author |
| Checked By: | Checker |

LARGE SCALES

VS-301

1/3/2018 9:03:02 AM
C:\Users\gtubbs\Documents\17008_Museum School Avondale Estates_R15_JA_Central_BTubbs@jaengineering.net.rvt

## GENERAL NOTES: (APPLY TO THIS SHEET ONLY)

A. ALL CABLES TO BE PLENUM GRADE. VIDEO SURVEILLANCE SYSTEM CABLES TO BE MINIMUM OF CATEGORY 6. SEE SPECIFICATIONS FOR REQUIREMENTS.

B. REFERENCE FLOOR PLAN DRAWINGS, SPECIFICATIONS, & SCHEDULES FOR COMPLETE REQUIREMENTS.

C. ALL CAMERAS, LENSES, MOUNTS, AND HOUSINGS TO BE PROVIDED AND INSTALLED BY SECURITY CONTRACTOR.

D. ALL VIDEO DISPLAY MONITORS PROVIDED FOR THIS PROJECT MUST BE RATED FOR 24/7 CONTINUOUS OPERATION.

E. ALL UPS UNITS MUST BE POWERED BY EMERGENCY POWER CIRCUITS. CONTRACTOR MUST PROVIDE AND INSTALL EMERGENCY POWER CIRCUIT AND RECEPTACLE.

## KEY NOTES: (APPLY TO THIS SHEET ONLY)

1. SECURITY CONTRACTOR TO PROVIDE AND INSTALL POE NETWORK SWITCH AND FIBER PATCH PANEL
2. SECURITY CONTRACTOR TO PROVIDE AND INSTALL PoE EXTENDERS AS NEEDED FOR EXTERIOR CAMERAS AND CAMERAS GREATER THAN 270' FROM PATCH PANEL. PoE EXTENDERS TO BE INSTALLED IN METAL ENCLOSURES WITH HINGED LOCKABLE DOORS.
3. SECURITY CONTRACTOR TO PROVIDE AND INSTALL CATEGORY 6 CABLE.
4. ALL EXTERIOR CAMERAS TO BE PROVIDED WITH HEATER, BLOWER, AND WEATHER-PROOF HOUSING.
5. ALL CABLES FOR CAMERAS ARE TO BE TERMINATED ON ETHERNET BISCUITS. VOICE/DATA CONTRACTOR TO PROVIDE CAT 6 JUMPER TO CONNECT BISCUIT TO CAMERA.
6. ALL EXTERIOR CAMERAS TO BE PROVIDED WITH TVSS DEVICES ON PoE / ETHERNET SIGNAL ON CAMERA END AND AT NETWORK SWITCH.
7. SECURITY CONTRAACTOR TO PROVIDE AND INSTALL A MASTER CLOCK SERVER. SECURITY CONTRACTOR IS RESPONSIBLE FOR ENSURING THAT ALL ACTIVE DEVICES ARE SYNCHRONIZED WITH AND CONNECTED TO THE MASTER CLOCK.
8. SECURITY CONTRACTOR SHALL PROVIDE AND INSTALL AVIGILON SERVER AND STORAGE COMPUTER HARDWARE LICENSED AS DOCUMNETED BY THE SPECIFICATIONS.
9. OWNER PROVIDED FIBER OPTIC NETWORK CONNECTIVITY.
10. SECURITY CONTRACTOR TO PROVIDE AND INSTALL VIDEO MANAGEMENT SOFTWARE, OPERATING SYSTEM SOFTWARE AND DATABASE ENGINE.
11. SECURITY CONTRACTOR TO PROVIDE AND INSTALL PATCH PANEL IN EXISTING RACK IN EACH ELEC/DATA OR IT EQUIPMENT ROOM. COORDINATE WITH MUSEUM SCHOOL IT SUPPORT.
12. SECURITY CONTRACTOR TO PROVIDE, INSTALL AND TERMINATE 6 STRAND MULTI-MODE FIBER OPTIC CABLE BETWEEN MDF, SERVER RM 12 AND EXISTING WALL MOUNTED EQUIPMENT CABINET IN IDF 2, FACULTY RM 312 .

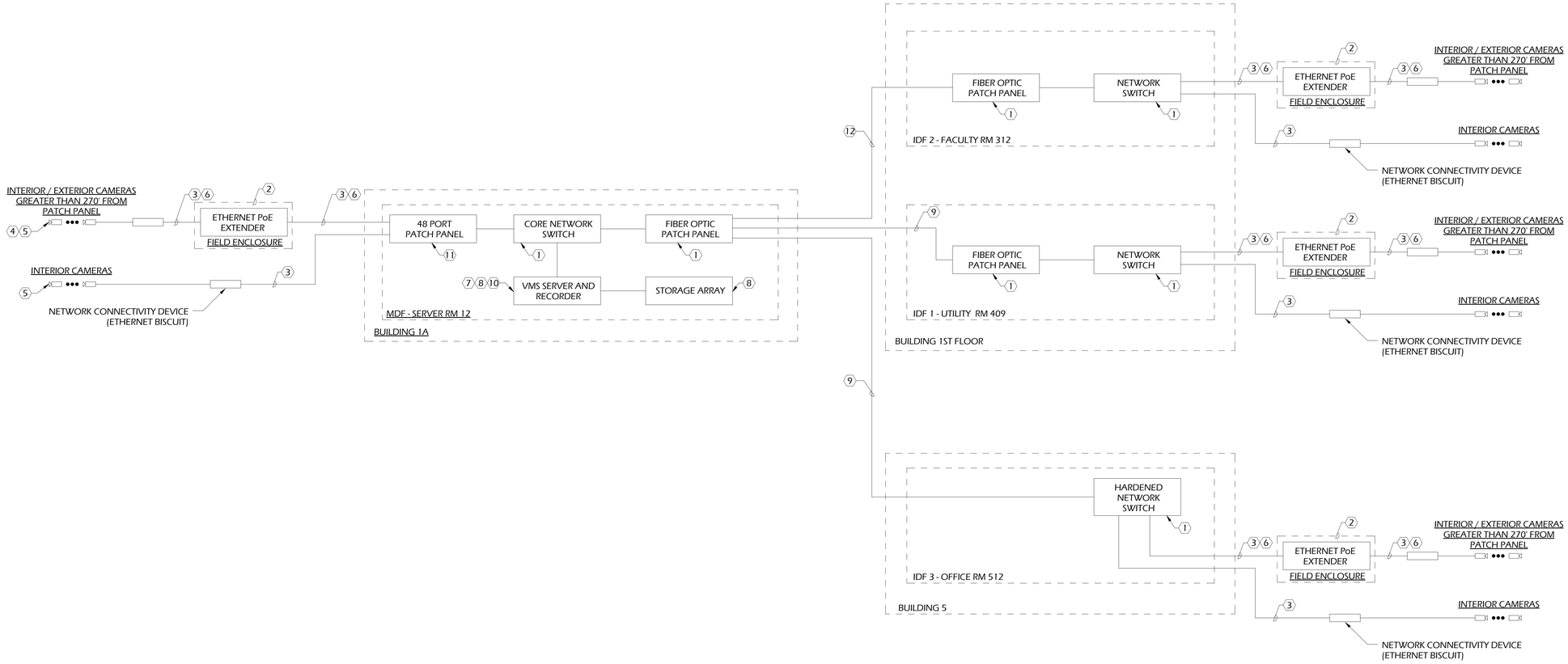


ONE LINES
N.T.S.

1 VIDEO SURVEILLANCE


J&A ENGINEERING CONSULTANTS
49994 LOWER ROSWELL ROAD, SUITE ONE
MARIETTA, GEORGIA 30068
PHONE (770) 817-4220
FAX (770) 234-4820
WWW.JAENGINEERING.NET


Professional Seal

GEORGIA REGISTERED No. 24242 PROFESSIONAL ENGINEER GEORGE E GOWER

100% CONSTRUCTION DOCUMENTS

# VIDEO SURVEILLANCE SYSTEMS
# MUSEUM SCHOOL OF AVONDALE ESTATES
923 FORREST BLVD
DECATUR, GA 30030

100% CD 01/04/2018

Original Document Size = 30" x 42"


These drawings are the property of J&A Engineering and may not be reproduced or reused without permission of J&A Engineering, LLC 2009


Project No: 17008

Drawn By: Author

Checked By: Checker

ONE-LINE DIAGRAM - VIDEO SURVEILLANCE SYSTEM

VS-401

1/3/2018 9:03:13 AM
C:\Users\btubbs\Documents\17008_Museum School Avondale Estates_R15_JA_Central_BTubbs@jaengineering.net.rvt

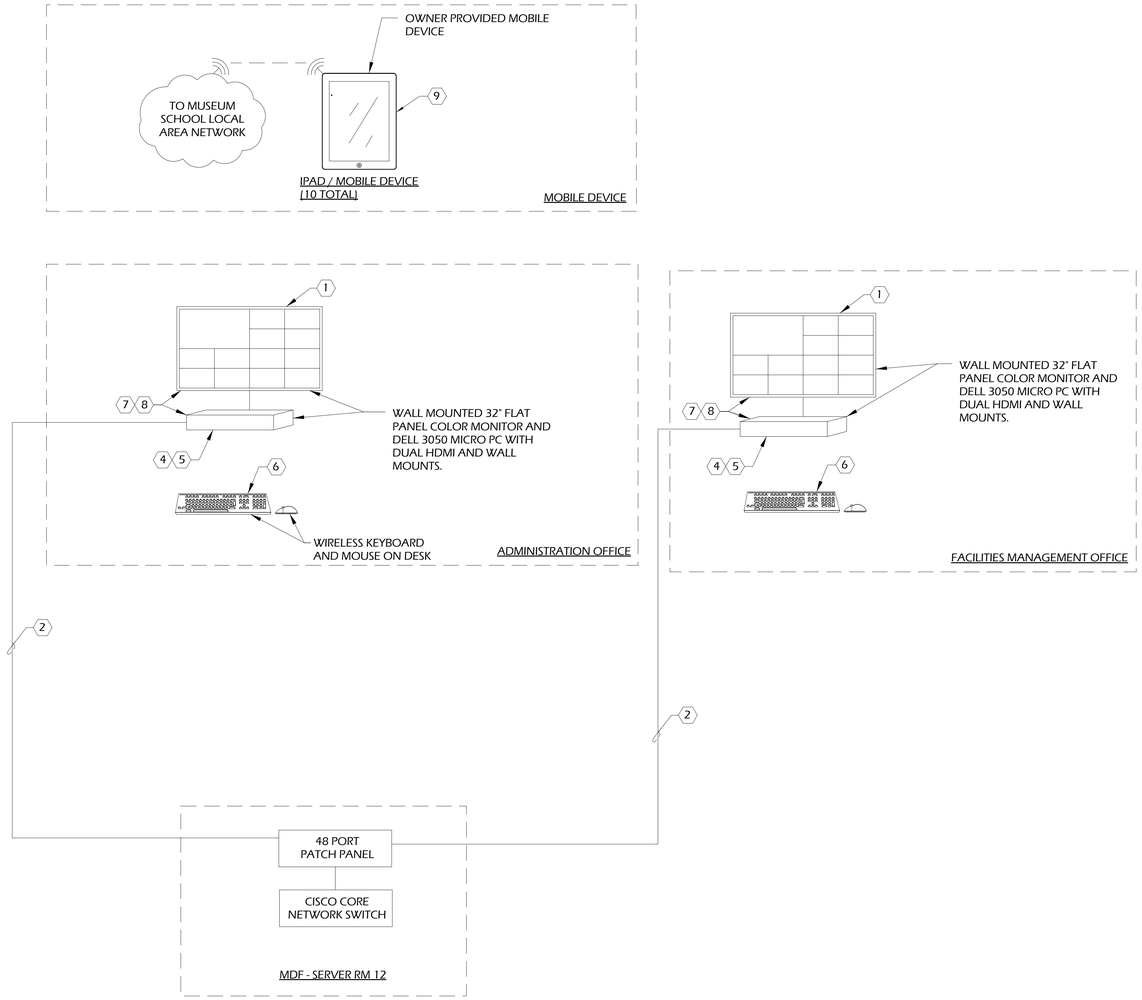


ONE LINE
NOT TO SCALE

1 CCTV SYSTEM ONE-LINE DIAGRAM

## GENERAL NOTES (APPLY TO 1/LV-402 ONLY)

A. ALL CABLES TO BE PLENUM GRADE. VIDEO SURVEILLANCE SYSTEM CABLES TO BE MINIMUM OF CATEGORY 6. SEE SPECIFICATIONS FOR REQUIREMENTS.

B. REFERENCE FLOOR PLAN DRAWINGS, SPECIFICATIONS, & SCHEDULES FOR COMPLETE REQUIREMENTS.

C. ALL EQUIPMENT TO BE PROVIDED BY SECURITY CONTRACTOR EXCEPT WHERE SPECIFICALLY NOTED AS "PROVIDED BY OWNER" , "EXISTING", OR "PROVIDED BY VOICE/DATA CONTRACTOR".

D. ALL EXISTING CAMERAS, MONITORS, DIGITAL VIDEO RECORDERS, CCTV POWER SUPPLIES, LOW VOLTAGE POWER AND VIDEO SIGNAL CABLE TO BE REMOVED BY CONTRACTOR. ALL EQUIPMENT MUST BE TURNED OVER TO OWNER. ALL ANALOG CABLE TO BE REMOVED AND DISCARDED BY SECURITY CONTRACTOR. DEMOLITION IS NOT TO OCCUR UNTIL SUCH TIME SYSTEM IS UP AND FULLY FUNCTIONAL, AND NOT WITHOUT DISTRICT WRITTEN AUTHORIZATION. THE DEMOLITION OF THE OLD SYSTEM MUST PROTECT THE NEW SYSTEM AND ALL WORK MUST BE DONE AFTER SCHOOL, EVENINGS, OR WEEKENDS.

E. ALL VIDEO DISPLAY MONITORS PROVIDED FOR THIS PROJECT MUST BE RATED FOR 24/7 CONTINUOUS OPERATION.

F. ALL UPS UNITS MUST MUST BE POWERED BY UN-SWITCHED, DEDICATED POWER CIRCUITS. CONTRACTOR MUST PROVIDE AND INSTALL POWER CIRCUIT AND RECEPTACLE.

## KEY NOTES (APPLY TO 1/LV-402 ONLY)

1. SECURITY CONTRACTOR TO PROVIDE AND INSTALL ONE (1) 32" WALL MOUNTED FLAT PANEL LCD COLOR MONITORS. TO BE UTILIZED FOR PROGRAMMABLE MULTI-SCREEN OUTPUT. SEE SPECIFICATION FOR ADDITIONAL REQUIREMENTS.

2. SECURITY CONTRACTOR TO PROVIDE AND INSTALL CATEGORY 6 CABLE AND VIDEO INTERVIEW WORKSTATION (INCLUDING ALL COMPUTER HARDWARE, SOFTWARE AND SPEAKERS).

3. SECURITY CONTRACTOR TO PROVIDE AND INSTALL ALL CLIENT SOFTWARE ON OWNER PROVIDED WORKSTATION HARDWARE.

4. SECURITY CONTRACTOR TO PROVIDE AND INSTALL UPS. UPS UNIT MUST BE SIZED FOR A MINIMUM OF 30 MINUTES BATTERY BACK-UP FOR ALL ACTIVE EQUIPMENT INCLUDING WORKSTATIONS AND MONITORS. UPS MUST BE WALL MOUNTABLE BEHIND MONITORS SEE SPECIFICATION FOR ADDITIONAL REQUIREMENTS.

5. SECURITY CONTRACTOR TO PROVIDE AND INSTALL ALL COMPUTER HARDWARE AND SOFTWARE FOR WORKSTATION.

6. SECURITY CONTRACTOR TO PROVIDE WIRELESS KEYBOARD AND MOUSE.

7. SECURITY CONTRACTOR TO PROVIDE AND INSTALL DATA OUTLET (AT APPROPRIATE HEIGHT) AND CAT 6 CABLE TO MDF OR CLOSEST IDF ROOM (INCLUDING ALL TERMINATIONS) AT WORKSTATION LOCATIONS.

8. SECURITY CONTRACTOR TO PROVIDE AND INSTALL UNSWITCHED, DEDICATED 120 VAC, 20 AMP CIRCUIT WITH DUPLEX OUTLETS (AT APPROPRIATE HEIGHT) AT WALL MOUNTED MONITOR LOCATIONS AND AT WORKSTATION LOCATIONS.

9. SECURITY CONTRACTOR TO PROVIDE AND INSTALL ALL COMPUTER HARDWARE, SOFTWARE APPLICATIONS, LICENSES, AND PROGRAMMING NECESSARY FOR TEN (10) MOBILE CLIENTS. COORDINATE WITH MUSEUM SCHOOL IT DEPARTMENT FOR SETUP OF MOBILE USER GROUPS, NAMES, AND PASSWORDS.

J&A ENGINEERING CONSULTANTS
49994 LOWER ROSWELL ROAD, SUITE ONE
MARIETTA, GEORGIA 30068
PHONE (770) 817-4220
FAX (770) 234-6920
WWW.JAENGINEERING.NET

Professional Seal

100% CONSTRUCTION DOCUMENTS

VIDEO SURVEILLANCE SYSTEMS
MUSEUM SCHOOL OF AVONDALE ESTATES
923 FORREST BLVD
DECATUR, GA 30030

100% CD 01/04/2018

Original Document Size = 30" x 42"

These drawings are the property of J&A Engineering and may not be reproduced or reused without permission of J&A Engineering, LLC 2009

Project No: 17008
Drawn By: Author
Checked By: Checker

ONE-LINE DIAGRAM - VIDEO SURVEILLANCE SYSTEM

VS-402

1/3/2018 9:03:23 AM
C:\Users\btubbs\Documents\17008_Museum School Avondale Estates_R15_JA_Central_BTubbs@jaengineering.net.rvt

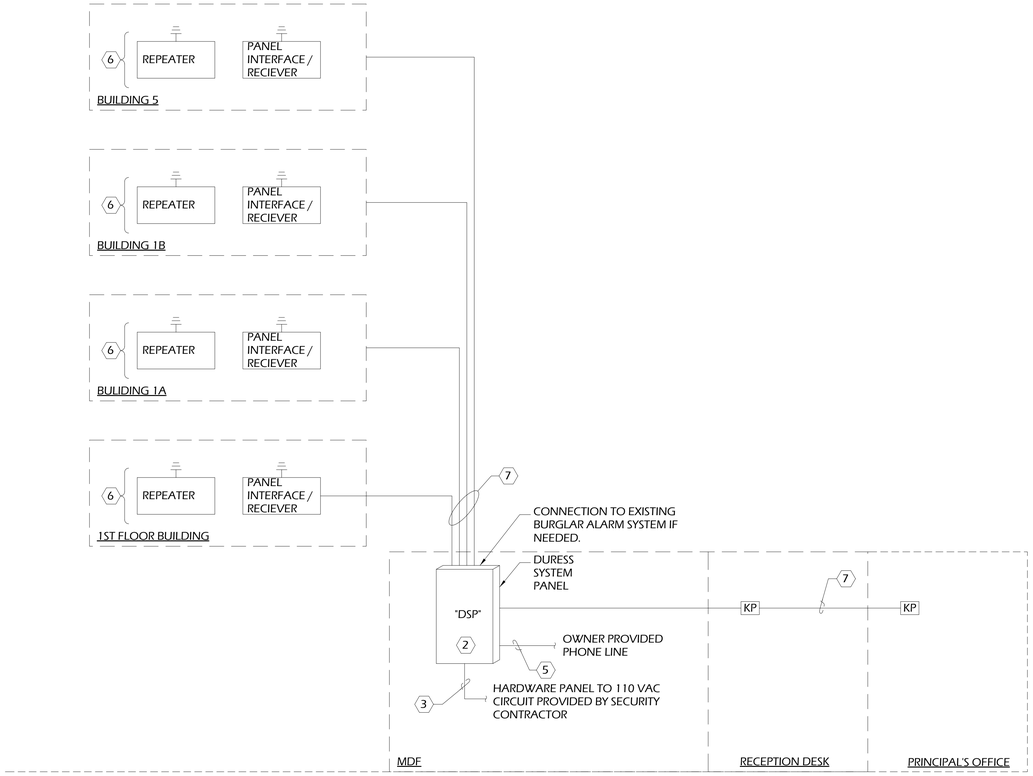


ONE LINE
NOT TO SCALE

1 DURESS BUTTON SYSTEM
MUSEUM SCHOOL

## KEY NOTE:

APPLY TO 1/VS-403 ONLY)

1. SECURITY CONTRACTOR TO PROVIDE FORTY (40) DUAL BUTTON DURESS PENDANTS.
2. SECURITY CONTRACTOR TO PROVIDE BATTERY BACK-UP EQUIPMENT FOR DURESS SYSTEM PANEL TO SUPPORT A PERIOD OF 4 HOURS.
3. ELECTRICAL CONTRACTOR TO PROVIDE AND INSTALL DEDICATED, UN-SWITCHED 120 VAC/20 AMP POWER CIRCUIT.
4. THE MUSEUM SCHOOL IS RESPONSIBLE FOR ALL PROGRAMMING AND SET-UP OF DURESS SYSTEM PANEL.
5. SECURITY CONTRACTOR TO COORDINATE WITH OWNER FOR PROVIDING AND INSTALLING STANDARD VOICE GRADE PHONE LINE AND PHONE JACK ALARM CONTROL PANEL LOCATION IF NEEDED.
6. SECURITY CONTRACTOR SHALL BE RESPONSIBLE FOR PROVIDING, INSTALLING AND LOCATING REPEATERS SUCH THAT THERE ARE NO DEAD SPOTS IN THE CLASSROOMS OR HALLWAYS IMMEDIATELY OUTSIDE THE CLASSROOMS.
7. SECURITY CONTRACTOR TO PROVIDE AND INSTALL ALL LOW VOLTAGE CABLE.
8. SECURITY CONTRACTOR TO PRICE DURESS BUTTON SYSTEM AS AN ADD ALTERNATE.

J&A ENGINEERING CONSULTANTS
49994 LOWER ROSWELL ROAD, SUITE ONE
MARIETTA, GEORGIA 30068
PHONE (770) 817-4220
FAX (770) 234-6920
WWW.JAENGINEERING.NET

Professional Seal

GEORGIA REGISTERED No. 24242 PROFESSIONAL ENGINEER GEORGE E GOWER

100% CONSTRUCTION DOCUMENTS

VIDEO SURVEILLANCE SYSTEMS
MUSEUM SCHOOL OF AVONDALE ESTATES
923 FORREST BLVD
DECATUR, GA 30030

100% CD 01/04/2018

Original Document Size = 30" x 42"

These drawings are the property of J&A Engineering and may not be reproduced or reused without permission of J&A Engineering, LLC 2009

Project No: 17008
Drawn By: Author
Checked By: Checker

ONE-LINE DIAGRAM - DURESS SYSTEM

VS-403

1/3/2018 9:03:31 AM
C:\Users\jbtubbs\Documents\17008_Museum School Avondale Estates_R15_JA_Central_BTubbs@jaengineering.net.rvt

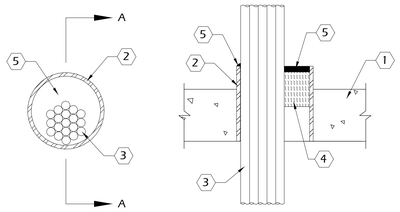


SECTION
A-A
F RATINGS -2, 3 AND 4 HR (SEE ITEM 5)
T RATINGS - 0, 1/2 AND 2-3/4 HR (SEE ITEM 5)

## KEY NOTES:

(APPLY TO THIS DETAIL ONLY)

1 FLOOR OR WALL ASSEMBLY - MIN 2-1/2 IN. (64 MM) OR 4-1/2 IN. (114 MM) THICK REINFORCED LIGHTWEIGHT OR NORMAL WEIGHT (100-150 PCF OR 1600-2400 KG/M3) CONCRETE. WALL MAY ALSO BE CONSTRUCTED OF ANY UL CLASSIFIED CONCRETE BLOCKS*. FLOOR MAY ALSO BE CONSTRUCTED OF ANY UL CLASSIFIED HOLLOW-CORE PRECAST CONCRETE UNITS*. MAX DIAM OF OPENING IS 6 IN. (152 MM).
SEE CONCRETE BLOCKS (CAZT) AND PRECAST CONCRETE UNITS (CFTV) CATEGORIES IN THE FIRE RESISTANCE DIRECTORY FOR NAMES OF MANUFACTURERS.

2 SLEEVE - (OPTIONAL) - NOM 6 IN. (152 MM) DIAM (OR SMALLER) SCHEDULE 10 (OR HEAVIER) STEEL PIPE SLEEVE, NOM 6 IN. (152 MM) DIAM (OR SMALLER) NO. 26 GA (0.022 IN. OR 0.56 MM THICK) SHEET STEEL SLEEVE WITH SQUARE ANCHOR FLANGE SPOT WELDED TO SLEEVE AT APPROX MID-HEIGHT OR NOM 6 IN. (152 MM) DIAM (OR SMALLER) SCHEDULE 40 POLYVINYL CHLORIDE (PVC) PIPE SLEEVE CAST OR GROUTED INTO FLOOR OR WALL FLUSH WITH FLOOR OR WALL SURFACES. STEEL PIPE SLEEVE MAY BE INSTALLED TO PROJECT A MAX OF 2 IN. (51 MM) BEYOND THE FLOOR OR WALL SURFACES.

3 CABLES - AGGREGATE CROSS-SECTIONAL AREA OF CABLES IN SLEEVE TO BE MAX 45 PERCENT OF THE CROSS-SECTIONAL AREA OF THE SLEEVE. SEE ITEM 5 FOR SPECIFIC CABLE FILL REQUIREMENTS. TIGHT BUNDLE OF CABLES TO BE INSTALLED IN THE STEEL SLEEVE. THE ANNULAR SPACE WITHIN THE FIRESTOP SYSTEM SHALL BE A MIN OF 0 IN. (POINT CONTACT) TO A MAX OF 2 IN. IN 4 HR FIRE RATED ASSEMBLIES, THE ANNULAR SPACE WITHIN THE FIRESTOP SYSTEM SHALL BE A MIN OF 1/4 IN. (6 MM) TO A MAX OF 1 IN. (25 MM). CABLES TO BE RIGIDLY SUPPORTED ON BOTH SIDES OF THE FLOOR OR WALL ASSEMBLY. ANY COMBINATION OF THE FOLLOWING TYPES AND SIZES OF CABLES MAY BE USED:

A. MAX 400 PAIR NO. 24 AWG (OR SMALLER) COPPER CONDUCTOR CABLE WITH POLYVINYL CHLORIDE (PVC) JACKETING AND INSULATION.
B. MAX 3/C NO. 2/0 AWG (OR SMALLER) ALUMINUM OR COPPER CONDUCTOR SERVICE ENTRANCE CABLE WITH PVC INSULATION AND JACKET.
C. MAX 3/C NO. 2/0 AWG (OR SMALLER) COPPER CONDUCTOR PVC JACKETED ALUMINUM CLAD OR STEEL CLAD TECK 90 CABLE.
D. MAX 3/C NO. 8 AWG (OR SMALLER) NONMETALLIC SHEATHED (ROMEX) CABLE WITH COPPER CONDUCTORS, PVC INSULATION AND JACKET.
E. MAX 1/C 1000 KCMIL (OR SMALLER) COPPER CONDUCTOR POWER CABLE WITH XLPE OR PVC INSULATION AND XLPE OR PVC JACKET.
F. MAX RG59/U (OR SMALLER) COAXIAL CABLE WITH FLUORINATED ETHYLENE INSULATION AND JACKETING.
G. MAX 62.5/48 FIBER OPTIC CABLE WITH PVC INSULATION AND JACKETING.
H. MAX 4 PAIR NO. 24 AWG (OR SMALLER) COPPER CONDUCTOR DATA CABLE WITH PVC INSULATION AND JACKET.

3A THROUGH PENETRATING PRODUCT* - (NOT SHOWN) - MAX 4/C NO. 2/0 AWG (OR SMALLER) STEEL OR ALUMINUM ARMORED CABLE+ OR METAL CLAD CABLE+ WITH COPPER OR ALUMINUM CONDUCTORS. DIAM OF CABLE BUNDLE (ITEM 3) INCLUDING ARMORED CABLE NOT TO EXCEED 4 IN. THROUGH PENETRATING PRODUCT TO BE RIGIDLY SUPPORTED ON BOTH SIDES OF A FLOOR OR WALL ASSEMBLY.

4 AFC CABLE SYSTEMS INC
PACKING MATERIAL - MIN 2, 3 OR 4 IN. (51, 76 OR 102 MM) THICKNESS OF MIN 4 PCF (64 KG/M3) DENSITY MINERAL-WOOL BATT INSULATION TIGHTLY PACKED INTO OPENING AS A PERMANENT FORM FOR 2, 3 OR 4 HR FIRE RATED ASSEMBLIES, RESPECTIVELY . PACKING MATERIAL TO BE RECESSED FROM TOP EDGE OF SLEEVE OR FROM TOP SURFACE OF CONCRETE IN CAST CONCRETE FLOOR ASSEMBLIES TO ACCOMMODATE THE REQUIRED THICKNESS OF FILL MATERIAL. PACKING MATERIAL TO BE RECESSED FROM BOTH EDGES OF SLEEVE OR FROM BOTH SURFACES OF ASSEMBLY IN WALLS AND IN FLOOR CONSTRUCTED WITH HOLLOW-CORE PRECAST CONCRETE UNITS TO ACCOMMODATE THE REQUIRED THICKNESS OF FILL MATERIAL.

5 FILL, VOID OR CAVITY MATERIAL* - SEALANT OR PUTTY - MIN 1/2 IN. (13 MM) THICKNESS OF FILL MATERIAL APPLIED WITHIN THE ANNULUS FOR 2 AND 3 HR F RATINGS. MIN 3/4 IN. (19 MM) THICKNESS OF FILL MATERIAL APPLIED WITH THE ANNULUS FOR 4 HR F RATING. IN FLOORS, FILL MATERIAL TO BE INSTALLED FLUSH WITH TOP EDGE OF SLEEVE OR TOP SURFACE OF FLOOR. IN WALLS AND IN FLOOR CONSTRUCTED OF HOLLOW-CORE PRECAST CONCRETE UNITS, FILL MATERIAL TO BE INSTALLED FLUSH WITH BOTH ENDS OF SLEEVE OR BOTH SURFACES OF ASSEMBLY. F AND T RATINGS OF FIRESTOP SYSTEM ARE DEPENDENT UPON THE THROUGH OPENING SIZE, THICKNESS OF CONCRETE, SLEEVE TYPE AND PERCENT CABLE FILL, AS SHOWN IN THE FOLLOWING TABLE:

| MAX OPENING DIAM | MIN CONCRETE THICKNESS | OPTIONAL SLEEVE TYPE | CABLE TYPE | PERCENT CABLE FILL | F RATING | T RATING |
|---|---|---|---|---|---|---|
| 6 IN. (152 MM) | 2-1/2 IN. (64 MM) | PVC | A TO H, 3A | 37 | 2 HR | 0 HR |
| 6 IN. (152 MM) | 2-1/2 IN. (64 MM) | PVC | H | 45 | 2 HR | 0 HR |
| 6 IN. (152 MM) | 2-1/2 IN. (64 MM) | STEEL | A TO H, 3A | 37 | 2 HR | 0 HR |
| 6 IN. (152 MM) | 2-1/2 IN. (64 MM) | STEEL | H | 45 | 2 HR | 0 HR |
| 6 IN. (152 MM) | 4-1/2 IN. (114 MM) | STEEL | A TO H, 3A | 34 | 3 HR | 1/2 HR |
| 6 IN. (152 MM) | 4-1/2 IN. (114 MM) | STEEL | H | 45 | 3 HR | 1/2 HR |
| 2 IN. (52 MM) | 4-1/2 IN. (114 MM) | STEEL | H | 40 | 3 HR | 2-3/4 HR |
| 2 IN. (52 MM) | 4-1/2 IN. (114 MM) | STEEL | H | 40 | 4 HR | 2-3/4 HR |

SPECIFIED TECHNOLOGIES INC - SPECSEAL SERIES SSS SEALANT OR SPECSEAL LCI SEALANT. WHEN MIN FLOOR OR WALL THICKNESS IS 4-1/2 IN. (114 MM) , SPECSEAL PUTTY MAY BE USED.
*BEARING THE UL CLASSIFICATION MARK

DETAIL 1 — FIRESTOP SYSTEM - C-AJ-3154
NOT TO SCALE

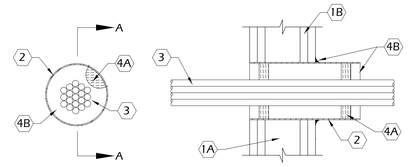


SECTION
A-A
F RATINGS -1 AND 2 HR (SEE ITEM 1)
T RATING - 3/4 HR

## KEY NOTES:

(APPLY TO THIS DETAIL ONLY)

1 WALL ASSEMBLY - THE 1 OR 2 HR FIRE RATED GYPSUM BOARD/STUD WALL ASSEMBLY SHALL BE CONSTRUCTED OF THE MATERIALS AND IN THE MANNER SPECIFIED IN THE INDIVIDUAL U300, U400 OR V400 SERIES WALL AND PARTITION DESIGNS IN THE UL FIRE RESISTANCE DIRECTORY AND SHALL INCLUDE THE FOLLOWING CONSTRUCTION FEATURES:

A. STUDS - WALL FRAMING MAY CONSIST OF EITHER WOOD STUDS OR STEEL CHANNEL STUDS. WOOD STUDS TO CONSIST OF NOM. 2 X 4 IN. (51 X 102MM) LUMBER SPACED 16 IN. (406MM) OC. STEEL STUDS TO BE MIN 3-1/2 IN. (76MM) WIDE AND SPACED MAX 14 IN. (610MM) OC.

B. GYPSUM BOARD - THICKNESS, NUMBER OF LAYERS, FASTENER TYPE AND SHEET ORIENTATION SHALL BE AS SPECIFIED IN THE INDIVIDUAL U300, U400 OR V400 SERIES DESIGN IN THE UL FIRE RESISTANCE DIRECTORY. MAX DIAM. OF OPENING IS 4-1/2 IN. (114MM).

THE HOURLY F RATING OF THE FIRESTOP SYSTEM IS EQUAL TO THE HOURLY FIRE RATING OF THE WALL ASSEMBLY IN WHICH IT IS INSTALLED.

2 STEEL SLEEVE - NOM. 4 IN. (102MM) DIAM. (OR SMALLER) STEEL ELECTRICAL METALLIC TUBING (EMT), STEEL CONDUIT OR SCHEDULE 5 (OR HEAVER) STEEL PIPE SLEEVE FRICTION-FITTED INTO WALL ASSEMBLY. SLEEVE MAY BE INSTALLED FLUSH WITH OR EXTEND UP TO 18 IN. (46 CM) BEYOND ONE OR BOTH WALL SURFACES.

3 CABLES - AGGREGATE CROSS-SECTIONAL AREA OF CABLES IN STEEL SLEEVE TO BE MAX. 48 PERCENT OF THE AGGREGATE CROSS-SECTIONAL AREA OF THE SLEEVE. CABLES TO BE BUNDLED AND RIGIDLY SUPPORTED ON BOTH SIDES OF WALL ASSEMBLY. THE ANNULAR SPACE BETWEEN THE CABLES AND THE SLEEVE SHALL BE MIN. 0 IN. (POINT CONTACT) TO MAX. 1-1/2 IN. (38MM). ANY COMBINATION OF THE FOLLOWING TYPES AND SIZES OF COPPER CONDUCTOR CABLE MAY BE USED:

A. MAX 200 PAIR NO. AWG (OR SMALLER) COPPER CONDUCTOR CABLE WITH POLYVINYL CHLORIDE (PVC) JACKETING AND INSULATION.
B. MAX 3/C NO. 2/0 AWG (OR SMALLER) ALUMINUM OR COPPER CONDUCTOR SERVICE ENTRANCE CABLE WITH PVC INSULATION AND JACKET.
C. MAX 3/C NO. 8 AWG (OR SMALLER) NONMETALLIC SHEATHED (ROMEX) CABLE WITH COPPER CONDUCTORS, PVC INSULATION AND JACKET.
D. MAX 7/C NO. 2/0 AWG (OR SMALLER) MULTICONDUCTOR POWER AND CONTROL CABLES WITH XLPE OR PVC INSULATION AND XLPE OR PVC JACKET.
E. MAX. RG/U (OR SMALLER) COAXIAL CABLE WITH FLOURINATED ETHYLENE INSULATION AND JACKETING.
F. MAX. 62.5/48 FIBER OPTIC CABLE WITH PVC INSULATION AND JACKETING.
G. MAX 4 PAIR NO. 24 AWG (OR SMALLER) COPPER CONDUCTOR DATA CABLE WITH PVC INSULATION AND JACKET.
H. MAX. 4/C NO 2/0 ALUMINUM OR COPPER CONDUCTOR ALUMINUM OR STEEL METAL-CLAD# OR ARMORED-CLAD# CABLE.

4 FIRESTOP SYSTEM - THE FIRESTOP SYSTEM SHALL CONSIST OF THE FOLLOWING:

A. PACKING MATERIAL - WHEN REQUIRED (SEE TABLE IN ITEM 3B), MIN. 1 IN. (25MM) THICKNESS OF MIN. 4.0 PCF (64 KG/M3) MINERAL WOOL BATT INSULATION FIRMLY PACKED INTO EACH END OF SLEEVE AS A PERMANENT FORM. PACKING MATERIAL TO BE RECESSED FROM EACH END OF SLEEVE AS REQUIRED TO ACCOMMODATE THE REQUIRED THICKNESS OF FILL MATERIAL.

B. FILL, VOID OR CAVITY MATERIAL* - SEALANT OR PUTTY - FILL MATERIAL APPLIED TO APPROPRIATE THICKNESS WITHIN STEEL SLEEVE, FLUSH WITH EDGES OF STEEL SLEEVE ON BOTH SURFACES OF WALL. MIN. $\frac{1}{2}$ IN. (13MM) DIAM. BEAD OF SEALANT OR "ROPE" OF PUTTY SHALL BE APPLIED AROUND THE PERIMETER OF THE SLEEVE ON EACH SIDE OF THE WALL WHEN SLEEVE EXTENDS BEYOND SURFACE OF WALL. SEE TABLE BELOW FOR FILL MATERIAL THICKNESS REQUIREMENTS.

| SEALANT OR PUTTY TYPE | THICKNESS | PACKING MATERIAL REQUIRED |
|---|---|---|
| SPECSEAL SERIES SSS SEALANT OR LCI SEALANT | 1/2 IN. (13 MM) | YES |
| SPECSEAL SERIES SSS SEALANT OR LCI SEALANT | 1 IN. (25 MM) | NO |
| SPECSEAL PUTTY | 1 IN. (25 MM) | NO |

SPECIFIED TECHNOLOGIES INC - SPECSEAL SERIES SSS SEALANT OR SPECSEAL LCI SEALANT. WHEN MIN FLOOR OR WALL THICKNESS IS 4-1/2 IN. (114 MM) , SPECSEAL PUTTY MAY BE USED.
*BEARING THE UL CLASSIFICATION MARK

DETAIL 2 — FIRESTOP SYSTEM - W-L-3210
NOT TO SCALE

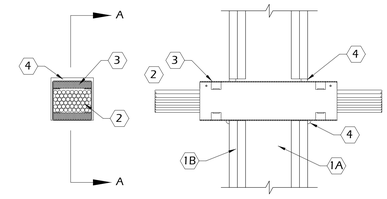


SECTION
A-A
F RATINGS -1 AND 2 HR (SEE ITEM 1)
T RATING - 3/4 HR (SEE ITEM 2)
L RATING AT AMBIENT - LESS THAN 1, 1.3, 4 OR 7 CFM (SEE ITEM 3)
L RATING AT 400 F - LESS THAN 1, 2 OR 3 CFM (SEE ITEM 3)

## KEY NOTES:

(APPLY TO THIS DETAIL ONLY)

1 WALL ASSEMBLY - THE 1 OR 2 HR FIRE RATED GYPSUM BOARD/STUD WALL ASSEMBLY SHALL BE CONSTRUCTED OF THE MATERIALS AND IN THE MANNER SPECIFIED IN THE INDIVIDUAL U300, U400 OR V400 SERIES WALL AND PARTITION DESIGNS IN THE UL FIRE RESISTANCE DIRECTORY AND SHALL INCLUDE THE FOLLOWING CONSTRUCTION FEATURES:

A. STUDS - WALL FRAMING MAY CONSIST OF EITHER WOOD STUDS OR STEEL CHANNEL STUDS. WOOD STUDS TO CONSIST OF NOM. 2 X 4 IN. (51 X 102MM) LUMBER SPACED 16 IN. (406MM) OC. STEEL STUDS TO BE MIN 3-1/2 IN. (76MM) WIDE AND SPACED MAX 14 IN. (610MM) OC.

B. GYPSUM BOARD - THICKNESS, NUMBER OF LAYERS, FASTENER TYPE AND SHEET ORIENTATION SHALL BE AS SPECIFIED IN THE INDIVIDUAL U300, U400 OR V400 SERIES DESIGN IN THE UL FIRE RESISTANCE DIRECTORY. MAX DIAM. OF OPENING IS 4-1/2 IN. (114MM).

THE HOURLY F RATING OF THE FIRESTOP SYSTEM IS EQUAL TO THE HOURLY FIRE RATING OF THE WALL ASSEMBLY IN WHICH IT IS INSTALLED.

2 CABLES - WITHIN THE LOADING AREA FOR EACH FIRESTOP DEVICE MODULE, THE CABLES MAY REPRESENT A 0 TO 100 PERCENT VISUAL FILL. CABLE FILL TO BE DISTRIBUTED AT A UNIFORM HEIGHT ACROSS THE WIDTH OF THE FIRESTOP DEVICE MODULE. CABLES TO BE RIGIDLY SUPPORTED ON BOTH SIDES OF THE WALL ASSEMBLY. ANY COMBINATION OF THE FOLLOWING TYPES OF CABLES MAY BE USED:

A. MAX. 100 PAIR NO. 24 AWG (OR SMALLER) COPPER CONDUTOR TELECOMMUNICATION CABLE WITH POLYVINYL CHLORIDE (PVC) JACKETING AND INSULATION.
B. MAX. 350 KCMIL SINGLE COPPER CONDUCTOR POWER CABLE WITH XLP E JACKET AND INSULATION.
C. MAX 7/C NO. 12 AWG COPPER CONDUCTOR CONTROL CABLE WITH PVC OR XLP E JACKET AND INSULATION.
D. MAX. 3/C NO. 10 AWG METAL CLAD OR ARMORED CABLE WITH STEEL OR ALUMINUM JACKET.
E. MAX. 3/C NO. 8 AWG NM CABLE (ROMEX) WITH PVC INSULATION AND JACKET.
F. MAX FOUR PAIR NO. 22 AWG (OR SMALLER) COPPER CONDUCTOR DATA CABLE WITH PVC OR PLENUM RATED JACKETING AND INSULATION.
G. MAX RG/U COAXIAL CABLE WITH FLOURINATED ETHYLENE INSULATION AND JACKETING.
H. FIBER OPTIC CABLE WITH PVC OR POLYETHYLENE (PE) JACKET AND INSULATION HAVING A MAX. DIAM. OF 0.5/8 IN. (16MM).
I. OPTICAL FIBER RACEWAY - MAX 1-1/2 IN. (38MM) DIAM. (OR SMALLER) OPTICAL FIBER RACEWAY ("INNERDUCT") FORMED OF EITHER PVC OR POLYVINYLIDENED FLOURIDE (PVDF) WITH OPTICAL FIBER CABLE FILL. RACEWAYS INSTALLED IN ACCORDANCE WITH THE NATIONAL ELECTRICAL CODE (NFPA 70).

WHEN THE HOURLY RATING OF THE WALL ASSEMBLY IS 1 HR, THE T RATING IS $\frac{1}{2}$ HR. WHEN THE HORULY RATING OF THE WALL ASSEMBLY IS 2 HR, THE T RATING IS $\frac{3}{4}$ HR. WHEN ITEM 2A, 2B, 2C, 2D OR 2E IS USED. OTHERWISE THE T RATING IS 1 HR.

THE L RATING FOR THE EMPTY FIRESTOP DEVICE IS LESS THAN 1CFM AT AMBIENT AND AT 400F.WHEN ITEM 3A IS USED, THE L RATING FOR THE FIRESTOP DEVICE WITH 100 PERCENT VISUAL FILL IS 4 CFM AT AMBIENT AND 3 CFM AT 400F. WHEN ITEM 3F IS USED, THE L RATING FOR THE FIRESTOP DEVICE WITH 100 PERCENT VISUAL FILL IS 1.3 CFM AT AMBIENT AND LESS THAN 1 CFM AT 400F. WHEN ITEM 3G OR 3H IS USED, THE L RATING FOR THE FIRESTOP DEVICE WITH 100 PERCENT VISUAL FILL IS 7 CFM AT AMBIENT AND 2 CFM AT 400F.

3 FIRESTOP DEVICE - FIRESTOP DEVICE CONSISTS OF A 3 X 3 X 10-1/2 IN. (76 X 76 X 267MM) LONG GALV. STEEL TUBE WITH AN INTUMESCENT MATERIAL LINING. FIRESTOP DEVICE TO BE INSTALLED IN ACCORDANCE WITH THE ACCOMPANYING INSTALLATION INSTRUCTIONS. PRIOR TO INSTALLATION WITHIN WALL, ATTACHMENT SCREWS AND LID REMOVED FROM DEVICE TO CAPTURE GROUPED CABLES. AFTER INSTALLATION OF CABLES, LID REPLACED AND REATTACHED WITH SAME SCREWS. DEVICE SLID ALONG CABLES INTO WALL SUCH TAT LID IS ON TOP AND ENDS PROJECT AN EQUAL DISTANCE FROM THE APPROX. CENTERLINE OF THE WALL ASSEMBLY. THE SPACE BETWEEN THE DEVICE AND THE PERIPHERY OF THE OPENING SHALL BE MIN. 0 IN. (0MM) TO MAX. $\frac{1}{2}$ IN. (13MM).

SPECIFIED TECHNOLOGIES INC - EZ PATH SERIES 33 FIRE RATED PATHWAY

4 FILL, VOID OR CAVITY MATERIAL - SEALANT - MIN. $\frac{5}{8}$ IN. (6MM) THICKNESS OF SEALANT TO BE APPLIED IN ANNULAR SPACE BETWEEN FIRESTOP DEVICE AND PERIPHERY OF OPENING ON EACH SIDE OF WALL ASSEMBLY. NOM $\frac{3}{8}$ IN. (10MM) DIAM. BEAD OF FILL MATERIAL APPLIED AT THE FIRESTOP DEVICE/GYPSUM BOARD INTERFACE ON BOTH SIDES OF THE WALL ASSEMBLY.

SPECIFIED TECHNOLOGIES INC. - SPECSEAL 100,101,102,105,120 OR 129 SEALANT, SPECSEAL LCI SEALANT, SPECSEAL LC150 SEALANT, PENSIL 300 SEALANT OR SPECSEAL SERIES SIL300 SEALANT.

DETAIL 3 — FIRESTOP SYSTEM - W-L-3219
NOT TO SCALE


J&A ENGINEERING CONSULTANTS
49994 LOWER ROSWELL ROAD, SUITE ONE
MARIETTA, GEORGIA 30068
PHONE (770) 817-4220
FAX (770) 924-6920
WWW.JAENGINEERING.NET


Professional Seal

GEORGIA REGISTERED No. 24242 PROFESSIONAL ENGINEER GEORGE E GOWER

100% CONSTRUCTION DOCUMENTS

VIDEO SURVEILLANCE SYSTEMS
MUSEUM SCHOOL OF AVONDALE ESTATES
923 FORREST BLVD
DECATUR, GA 30030

100% CD 01/04/2018

Original Document Size = 30" x 42"


These drawings are the property of J&A Engineering and may not be reproduced or reused without permission of J&A Engineering, LLC 2009


Project No: 17008
Drawn By: Author
Checked By: Checker

DETAILS

VS-501

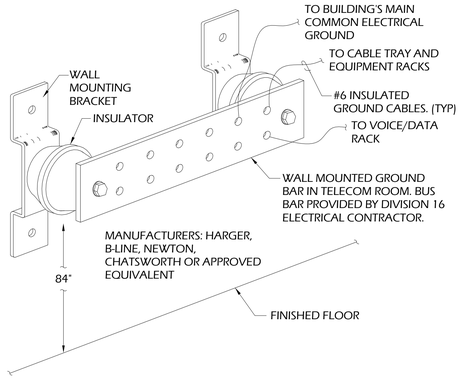


DETAIL 1 GROUNDING DETAIL
NOT TO SCALE

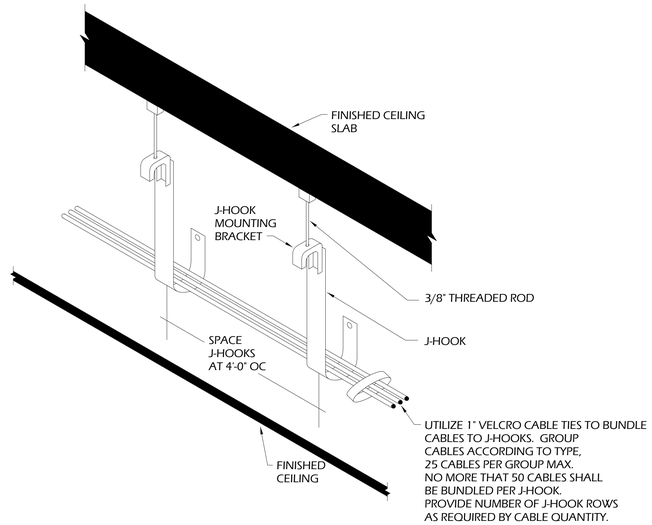


DETAIL 2 ACCESSIBLE CEILING CABLE INSTALLATION DETAIL
NOT TO SCALE

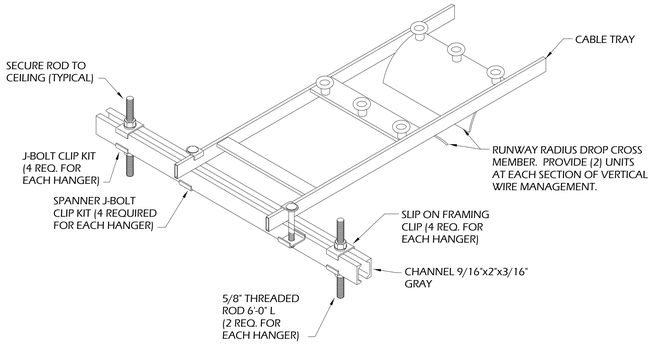


DETAIL 3 CEILING MOUNT CABLE TRAY INSTALLATION
NOT TO SCALE

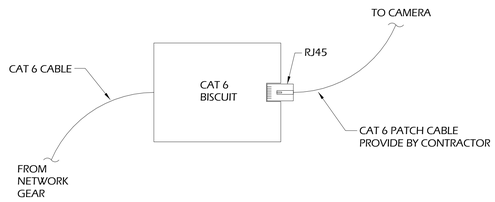


DETAIL 4 TYPICAL ETHERNET BISCUIT
NOT TO SCALE

J&A ENGINEERING CONSULTANTS
49994 LOWER ROSWELL ROAD, SUITE ONE
MARIETTA, GEORGIA 30068
PHONE (770) 817-4220
FAX (770) 234-6920
WWW.JAENGINEERING.NET

Professional Seal

100% CONSTRUCTION DOCUMENTS

VIDEO SURVEILLANCE SYSTEMS
MUSEUM SCHOOL OF AVONDALE ESTATES
923 FORREST BLVD
DECATUR, GA 30030

100% CD 01/04/2018

Original Document Size = 30" x 42"

These drawings are the property of J&A Engineering and may not be reproduced or reused without permission of J&A Engineering, LLC 2009

Project No: 17008
Drawn By: Author
Checked By: Checker

DETAILS

VS-502

1/3/2018 9:03:48 AM
C:\Users\gtubbs\Documents\17008_Museum School Avondale Estates_R15_JA_Central_BTubbs@jaengineering.net.rvt

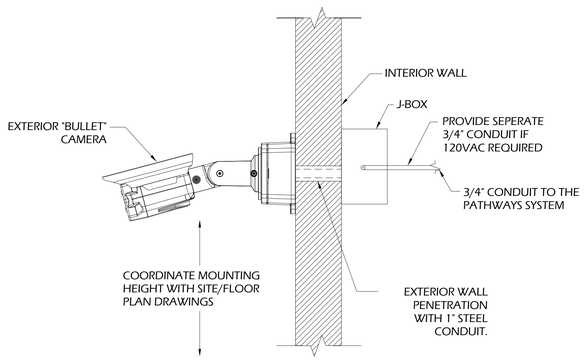


DETAIL 1 NOT TO SCALE

INTERIOR/EXTERIOR FIXED WALL MOUNT 'BULLET' CAMERA

BOX CAMERA ENCLOSURE

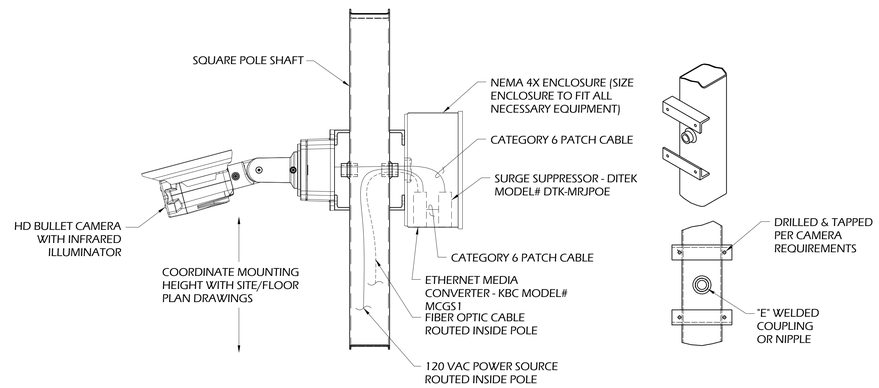


DETAIL 2 NOT TO SCALE

EXTERIOR FIXED POLE MOUNT 'BULLET' CAMERA

BOX CAMERA ENCLOSURE

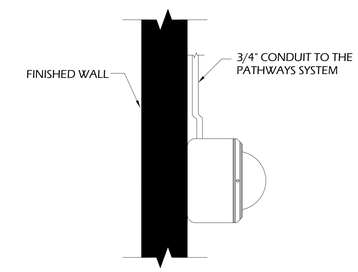


GENERAL NOTES: (APPLY TO THIS DETAIL ONLY)

A. PROVIDE 20'-0" SERVICE LOOP AT CAMERA LOCATION. SERVICE LOOP TO BE INSIDE BUILDING AND ABOVE CEILING.

DETAIL 3 NOT TO SCALE

INTERIOR FIXED WALL MOUNTED ON CONCRETE OR CMU WALL

SURFACE DOME CAMERA ENCLOSURE

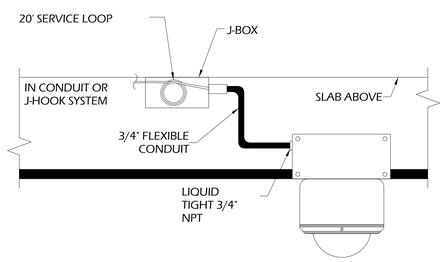


DETAIL 4 NOT TO SCALE

INTERIOR FIXED CEILING MOUNTED GYPSUM BOARD CEILING

SURFACE DOME CAMERA ENCLOSURE

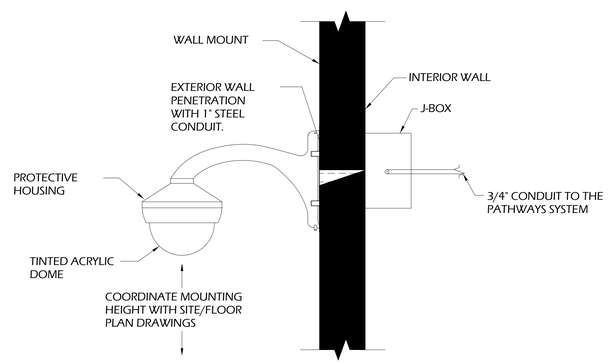


GENERAL NOTES: (APPLY TO THIS DETAIL ONLY)

A. PROVIDE 20'-0" SERVICE LOOP AT CAMERA LOCATION. SERVICE LOOP TO BE INSIDE BUILDING AND ABOVE CEILING.

DETAIL 5 NOT TO SCALE

INTERIOR/EXTERIOR FIXED WALL MOUNT

DOME CAMERA ENCLOSURE

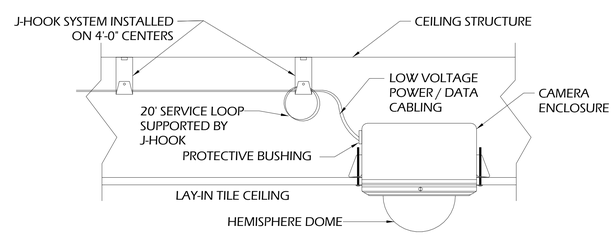


DETAIL 6 NOT TO SCALE

LAY-IN TILE CEILING MOUNT RECESSED DOME CAMERA ENCLOSURE

SURFACE DOME CAMERA ENCLOSURE

J&A ENGINEERING CONSULTANTS
49994 LOWER ROSWELL ROAD, SUITE ONE
MARIETTA, GEORGIA 30068
PHONE (770) 817-4220
FAX (770) 234-6920
WWW.JAENGINEERING.NET

Professional Seal

100% CONSTRUCTION DOCUMENTS

VIDEO SURVEILLANCE SYSTEMS

MUSEUM SCHOOL OF AVONDALE ESTATES
923 FORREST BLVD
DECATUR, GA 30030

100% CD 01/04/2018

Original Document Size = 30" x 42"

These drawings are the property of J&A Engineering and may not be reproduced or reused without permission of J&A Engineering, LLC 2009

Project No: 17008

Drawn By: Author

Checked By: Checker

DETAILS

VS-503

1/3/2018 9:03:59 AM
C:\Users\ptubbs\Documents\17008_Museum School Avondale Estates_R15_JA_Central_BTubbs@jaengineering.net.rvt

| CAMERA # | MODEL NUMBER (AVIGILON) | MEGAPIXEL | IDF / MDF | LENS | FIXED, P/T/Z OR MULTI-SENSOR | COMMENTS | MOUNTING REQUIREMENTS | REF SHEET | FIELD OF VIEW | VIEWING FORMAT | REF DETAIL |
|---|---|---|---|---|---|---|---|---|---|---|---|
| CS-1 | 9W-H3-3MH-DO1 | MULTI-SENSOR 9 MEG | MDF | 3 X 2.8 - 8MM | MULTI-SENSOR | | SURFACE MOUNTED DOME STYLE CAMERA | VS-101 | FRONT OF SCHOOL / ENTRANCE | ALL 3 IMAGERS / WIDE ANGLE | 5/VS-503 |
| CS-2 | 3.0C-H4A-BO1-IR | 3 MEG | MDF | 3 - 9 MM | FIXED | | WALL MOUNTED BULLET STYLE CAMERA | VS-101 | FRONT OF SCHOOL/ DROP-OFF LANE | WIDE ANGLE | 1/VS-503 |
| CS-3 | 3.0C-H4A-BO1-IR | 3 MEG | MDF | 3 - 9 MM | FIXED | | WALL MOUNTED BULLET STYLE CAMERA | VS-101 | DROP-OFF LANE APPROACHING BLDG 1A | WIDE ANGLE | 1/VS-503 |
| CS-4 | 5.0L-H4A-BO1-IR | 5 MEG | MDF | 4.3 - 8 MM | FIXED | ADD ALTERNATE | WALL MOUNTED BULLET STYLE CAMERA | VS-101 | COURTYARD / BLDG 1B | WIDE ANGLE | 1/VS-503 |
| CS-5 | 5.0L-H4A-BO1-IR | 5 MEG | MDF | 4.3 - 8 MM | FIXED | ADD ALTERNATE | WALL MOUNTED BULLET STYLE CAMERA | VS-101 | COURTYARD EAST | WIDE ANGLE | 1/VS-503 |
| CS-6 | 5.0L-H4A-BO1-IR | 5 MEG | MDF | 4.3 - 8 MM | FIXED | ADD ALTERNATE | WALL MOUNTED BULLET STYLE CAMERA | VS-101 | COURTYARD WEST | WIDE ANGLE | 1/VS-503 |
| CS-7 | 5.0L-H4A-BO1-IR | 5 MEG | IDF 2 | 4.3 - 8 MM | FIXED | ADD ALTERNATE | WALL MOUNTED BULLET STYLE CAMERA | VS-101 | REAR ENTRANCE TO BLDG 1A | WIDE ANGLE | 1/VS-503 |
| CS-8 | 3.0C-H4A-BO1-IR | 3 MEG | MDF | 3 - 9 MM | FIXED | | WALL MOUNTED BULLET STYLE CAMERA | VS-101 | DROP-OFF LANE / PARKING / SIDEWALK | WIDE ANGLE | 1/VS-503 |
| CS-9 | 3.0C-H4A-BO1-IR | 3 MEG | MDF | 3 - 9 MM | FIXED | | WALL MOUNTED BULLET STYLE CAMERA | VS-101 | PARKING / SIDEWALK FROM LOWER PARKING LOT | WIDE ANGLE | 1/VS-503 |
| CS-10 | 3.0C-H4A-BO1-IR | 3 MEG | MDF | 3 - 9 MM | FIXED | | WALL MOUNTED BULLET STYLE CAMERA | VS-101 | BUILDING 1B / EAST APPROACH AND SIDEWALK | WIDE ANGLE | 1/VS-503 |
| CS-11 | 2.0C-H4A-BO1-IR | 2 MEG | IDF 3 | 3 - 9 MM | FIXED | | WALL MOUNTED BULLET STYLE CAMERA | VS-101 | GYM ENTRANCE | WIDE ANGLE | 1/VS-503 |
| CS-12 | 3.0C-H4A-BO1-IR | 3 MEG | IDF 3 | 3 - 9 MM | FIXED | | WALL MOUNTED BULLET STYLE CAMERA | VS-101 | WALKWAY FROM BLDG 1B TO GYM | WIDE ANGLE | 1/VS-503 |
| CS-13 | 5.0L-H4A-BO1-IR | 5 MEG | IDF 1 | 4.3 - 8 MM | FIXED | | WALL MOUNTED BULLET STYLE CAMERA | VS-101 | WESTSIDE OF RECREATION FIELD - OPPOSING VIEW TO CS-14 | WIDE ANGLE | 1/VS-503 |
| CS-14 | 5.0L-H4A-BO1-IR | 5 MEG | IDF 1 | 4.3 - 8 MM | FIXED | | WALL MOUNTED BULLET STYLE CAMERA | VS-101 | EASTSIDE OF RECREATION FIELD - OPPOSING VIEW TO CS-13 | WIDE ANGLE | 1/VS-503 |
| CS-15 | 5.0L-H4A-BO1-IR | 5 MEG | IDF 2 | 4.3 - 8 MM | FIXED | | WALL MOUNTED BULLET STYLE CAMERA | VS-101 | FIELD AREA / BASKETBALL COURT | WIDE ANGLE | 1/VS-503 |
| CS-16 | 5.0L-H4A-BO1-IR | 5 MEG | IDF 2 | 4.3 - 8 MM | FIXED | ADD ALTERNATE | WALL MOUNTED BULLET STYLE CAMERA | VS-101 | PLAYGROUND AREA | WIDE ANGLE | 1/VS-503 |
| CS-17 | 2.0C-H4A-BO1-IR | 2 MEG | MDF | 3 - 9 MM | FIXED | ADD ALTERNATE | WALL MOUNTED BULLET STYLE CAMERA | VS-101 | ENTRY TO FIRST FLOOR BLDG | WIDE ANGLE | 1/VS-503 |
| | | | | | | | | | | | |
| C-1.1 | FUTURE | N/A | N/A | N/A | N/A | FUTURE LOCATION | N/A | VS-201 | N/A | N/A | N/A |
| C-1.2 | 3.0C-H4A-BO1-IR | 3 MEG | MDF | 3 - 9 MM | FIXED | ADD ALTERNATE | WALL MOUNTED BULLET STYLE CAMERA | VS-201 | CORRIDOR LEFT OF CAFETERIA | WIDE ANGLE | 1/VS-503 |
| C-1.4 | 12W-H3-4MH-DC1 | MULTI-SENSOR 12 MEG | MDF | 4 X 2.8 - 8 MM | MULTI-SENSOR | | CEILING MOUNTED DOME STYLE CAMERA | VS-201 | CORRIDOR 166 | 2 IMAGERS CORRIDOR FORMAT / 2 WIDE ANGLE | 6/VS-503 |
| C-1.5 | 3.0C-H4A-DC1 | 3 MEG | MDF | 3 - 9 MM | FIXED | ADD ALTERNATE | CEILING MOUNTED DOME STYLE CAMERA | VS-201 | SOUTHWEST EXITS OF CAFETERIA | WIDE ANGLE | 6/LV-503 |
| C-1.6 | 3.0C-H4A-DC1 | 3 MEG | MDF | 3 - 9 MM | FIXED | ADD ALTERNATE | CEILING MOUNTED DOME STYLE CAMERA | VS-201 | EAST CAFETERIA | WIDE ANGLE | 6/VS-503 |
| C-1.7 | 5.0L-H4A-DC1 | 5 MEG | MDF | 3 - 9 MM | FIXED | | CEILING MOUNTED DOME STYLE CAMERA | VS-201 | NORTHWEST EXIT OF CAFETERIA | WIDE ANGLE | 6/LV-503 |
| C-1.8 | 9W-H3-3MH-DC1 | MULTI-SENSOR 9 MEG | MDF | 3 X 2.8 - 8MM | MULTI-SENSOR | | CEILING MOUNTED DOME STYLE CAMERA | VS-201 | CORRIDOR 166 & 164 / WAITING / RECEPTION AREA | 1 IMAGER CORRIDOR FORMAT / 2 IMAGERS WIDE ANGLE | 6/VS-503 |
| C-1.9 | 2.0C-H4A-DC1 | 2 MEG | MDF | 3 - 9 MM | FIXED | | CEILING MOUNTED DOME STYLE CAMERA | VS-201 | WAITING / RECEPTION AREA | WIDE ANGLE | 6/LV-503 |
| C-1.10 | 12W-H3-4MH-DC1 | MULTI-SENSOR 12 MEG | MDF | 4 X 2.8 - 8 MM | MULTI-SENSOR | | CEILING MOUNTED DOME STYLE CAMERA | VS-201 | EAST & WEST CORRIDOR 164 / EXITS | 2 IMAGERS CORRIDOR FORMAT / 2 WIDE ANGLE | 6/VS-503 |
| C-1.11 | 3.0C-H4A-DC1 | 3 MEG | MDF | 3 - 9 MM | FIXED | | CEILING MOUNTED DOME STYLE CAMERA | VS-201 | WEST CORRIDOR 164 | CORRIDOR FORMAT | 6/LV-503 |
| C-1.12 | 1.0C-H4A-D1 | 1 MEG | MDF | 3 - 9 MM | FIXED | ADD ALTERNATE | SURFACE MOUNTED DOME STYLE CAMERA | VS-201 | ENTRACNCE TO CORRIDOR 164 | CORRIDOR FORMAT | 3/VS-503 |
| C-1.13 | 2.0C-H4A-DC1 | 2 MEG | MDF | 3 - 9 MM | FIXED | | CEILING MOUNTED DOME STYLE CAMERA | VS-201 | LOCKER AREA IN CONNECTING CORRIDOR | WIDE ANGLE | 6/VS-503 |
| C-1.14 | 2.0C-H4A-DC1 | 2 MEG | MDF | 3 - 9 MM | FIXED | | CEILING MOUNTED DOME STYLE CAMERA | VS-201 | LOCKER AREA IN CONNECTING CORRIDOR | WIDE ANGLE | 6/LV-503 |
| | | | | | | | | | | | |
| C-2.1 | 2.0C-H4A-DC1 | 2 MEG | MDF | 3 - 9 MM | FIXED | ADD ALTERNATE | CEILING MOUNTED DOME STYLE CAMERA | VS-202 | EAST CORRIDOR / RESTROOMS / STAIRWELL ENTRY | CORRIDOR FORMAT | 6/VS-503 |
| C-2.2 | 9W-H3-3MH-DC1 | MULTI-SENSOR 9 MEG | MDF | 3 X 2.8 - 8 MM | FIXED | | CEILING MOUNTED DOME STYLE CAMERA | VS-202 | CORRIDOR & EXIT TO CONNECTING COORIDOR | ALL 3 IMAGERS / CORRIDOR FORMAT | 6/LV-503 |
| C-2.3 | 2.0C-H4A-DC1 | 2 MEG | MDF | 3 - 9 MM | FIXED | | CEILING MOUNTED DOME STYLE CAMERA | VS-202 | CORRIDOR & STAIRWELL ENTRY | CORRIDOR FORMAT | 6/VS-503 |
| C-2.4 | 2.0C-H4A-DC1 | 2 MEG | MDF | 3 - 9 MM | FIXED | ADD ALTERNATE | CEILING MOUNTED DOME STYLE CAMERA | VS-202 | CORRIDOR & STAIRWELL ENTRY | CORRIDOR FORMAT | 6/LV-503 |
| C-2.5 | 9W-H3-3MH-DC1 | MULTI-SENSOR 9 MEG | IDF 2 | 3 X 2.8 - 8 MM | FIXED | | CEILING MOUNTED DOME STYLE CAMERA | VS-203 | ENTRY / CORRIDOR / STAIRWELL / RESTROOMS | 1 CORRIDOR FORMAT / 2 WIDE ANGLE | 6/VS-503 |
| C-2.6 | 3.0C-H4A-DC1 | 3 MEG | IDF 2 | 3 - 9 MM | FIXED | | CEILING MOUNTED DOME STYLE CAMERA | VS-203 | CORRIDOR | CORRIDOR FORMAT | 6/LV-503 |
| C-2.7 | 3.0C-H4A-DC1 | 3 MEG | IDF 2 | 3 - 9 MM | FIXED | ADD ALTERNATE | CEILING MOUNTED DOME STYLE CAMERA | VS-203 | CORRIDOR | CORRIDOR FORMAT | 6/VS-503 |
| C-2.8 | 12W-H3-4MH-DC1 | MULTI-SENSOR 12 MEG | IDF 1 | 4 X 2.8 - 8 MM | FIXED | | CEILING MOUNTED DOME STYLE CAMERA | VS-203 | CORRIDORS / EXIT DOORS / STAIRWELL ENTRANCE / ELEVATOR | 2 IMAGERS CORRIDOR FORMAT / 2 IMAGERS WIDE ANGLE | 6/LV-503 |
| C-2.9 | 5.0L-H4A-D1 | 5 MEG | IDF 1 | 4.3 - 8 MM | FIXED | | SURFACE MOUNTED DOME STYLE CAMERA | VS-203 | STAIRWELL & EXIT | WIDE ANGLE | 3/VS-503 |
| C-2.10 | 2.0C-H4A-DC1 | 2 MEG | IDF 1 | 3 - 9 MM | FIXED | ADD ALTERNATE | CEILING MOUNTED DOME STYLE CAMERA | VS-203 | CORRIDOR | CORRIDOR FORMAT | 6/VS-503 |
| C-2.11 | 2.0C-H4A-DC1 | 2 MEG | IDF 1 | 3 - 9 MM | FIXED | | CEILING MOUNTED DOME STYLE CAMERA | VS-203 | CORRIDOR | CORRIDOR FORMAT | 6/VS-503 |
| C-2.12 | 2.0C-H4A-DC1 | 2 MEG | IDF 1 | 3 - 9 MM | FIXED | | CEILING MOUNTED DOME STYLE CAMERA | VS-203 | CORRIDOR | CORRIDOR FORMAT | 6/LV-503 |
| C-2.13 | 2.0C-H4A-D1 | 2 MEG | IDF 1 | 3 - 9 MM | FIXED | | SURFACE MOUNTED DOME STYLE CAMERA | VS-203 | STAIRWELL | WIDE ANGLE | 3/VS-503 |
| | | | | | | | | | | | |
| C-3.1 | 3.0C-H4A-D1 | 3 MEG | IDF 3 | 3 - 9 MM | FIXED | | SURFACE MOUNTED DOME STYLE CAMERA | VS-204 | GYM FLOOR | WIDE ANGLE | 3/VS-503 |
| C-3.2 | 3.0C-H4A-D1 | 3 MEG | IDF 3 | 3 - 9 MM | FIXED | | SURFACE MOUNTED DOME STYLE CAMERA | VS-204 | GYM ENTRANCE & OFFICE | WIDE ANGLE | 3/VS-503 |
| C-3.3 | 3.0C-H4A-D1 | 3 MEG | IDF 3 | 3 - 9 MM | FIXED | | SURFACE MOUNTED DOME STYLE CAMERA | VS-204 | GYM FLOOR | WIDE ANGLE | 3/VS-503 |


J&A ENGINEERING CONSULTANTS
49994 LOWER ROSWELL ROAD, SUITE ONE
MARIETTA, GEORGIA 30068
PHONE (770) 817-4220
FAX (770) 234-6920
WWW.JAENGINEERING.NET


Professional Seal

GEORGIA REGISTERED No. 24242 PROFESSIONAL ENGINEER GEORGE E GOWER

100% CONSTRUCTION DOCUMENTS

VIDEO SURVEILLANCE SYSTEMS
MUSEUM SCHOOL OF AVONDALE ESTATES
923 FORREST BLVD
DECATUR, GA 30030

100% CD 01/04/2018

Original Document Size = 30" x 42"


These drawings are the property of J&A Engineering and may not be reproduced or reused without permission of J&A Engineering, LLC 2009


Project No: 17008

Drawn By: Author

Checked By: Checker

CAMERA SCHEDULE

VS-601


1/3/2018 9:04:08 AM
C:\Users\ptubbs\Documents\17008_Museum School Avondale Estates_R15_JA_Central_BTubbs@jaengineering.net.rvt